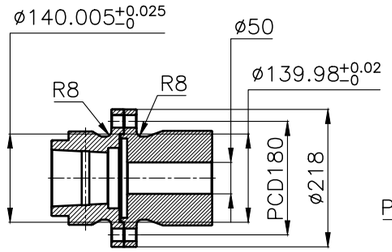

OUTPUT SHAFT COUPLING & PROPELLER COUPLING DIMENSION

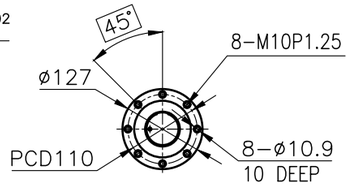

INPUT COUPLING DIMENSION

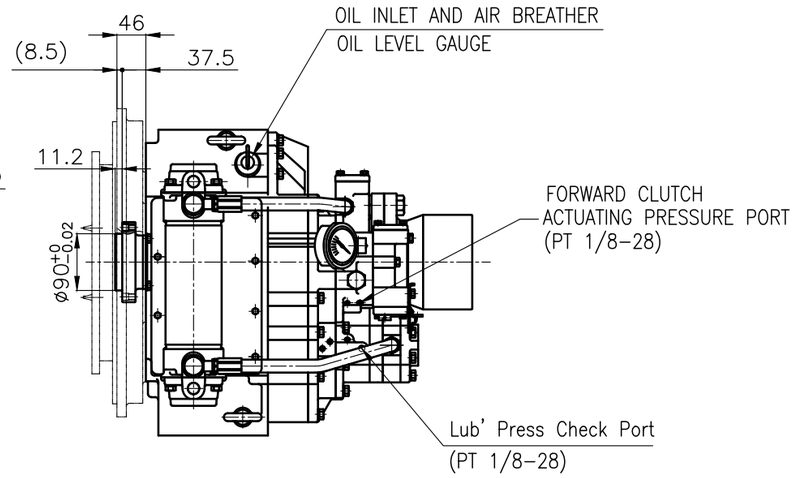

DMT 150H MARINE TRANSMISSION SPECIFICATION		
GEAR RATIO	1.83, 2.09 , 2.51 , 3.08 , 3.43	
TOTAL WEIGHT	APPROX. 287 kg(DRY)	
OIL CAPACITY	APPROX. 5.5 L	
OIL VISCOSITY	SAE # 30	
OIL PRESSURE	1.96 ~ 2.54 MPa	CLUTCH OIL
DIRECTION OF ROTATION IN FORWARD	INPUT	C.C.W VIEWED FROM THE STERN
	OUTPUT	C.W VIEWED FROM THE STERN
OIL CHANGE INTERVAL	THE FIRST 100HOURS OF INITIAL OPERATION	
	AND EVERY 1000HOURS THEREAFTER	
SHIFTING LIMIT	UNDER 50% OF THE RATED ENGINE SPEED	
OIL COOLER	WATER FLOW 40 ~ 60L/min	
	TEMPERATURE OF COOLING WATER	MAX 32°C
OPERATING TORQUE OF SHIFTING LEVER		UNDER 2.94Nm

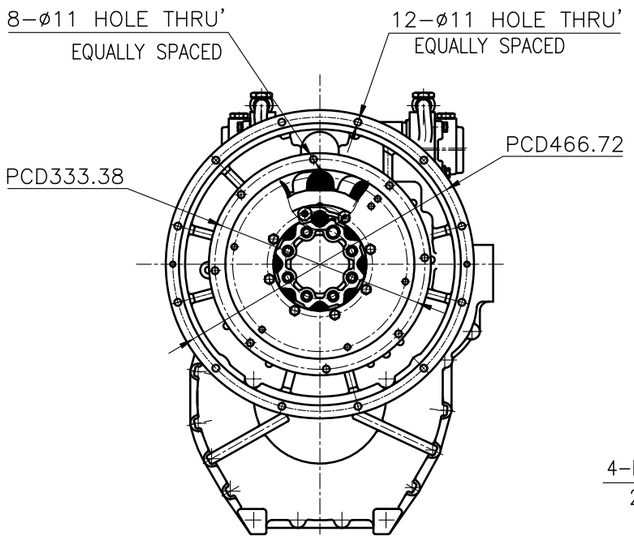

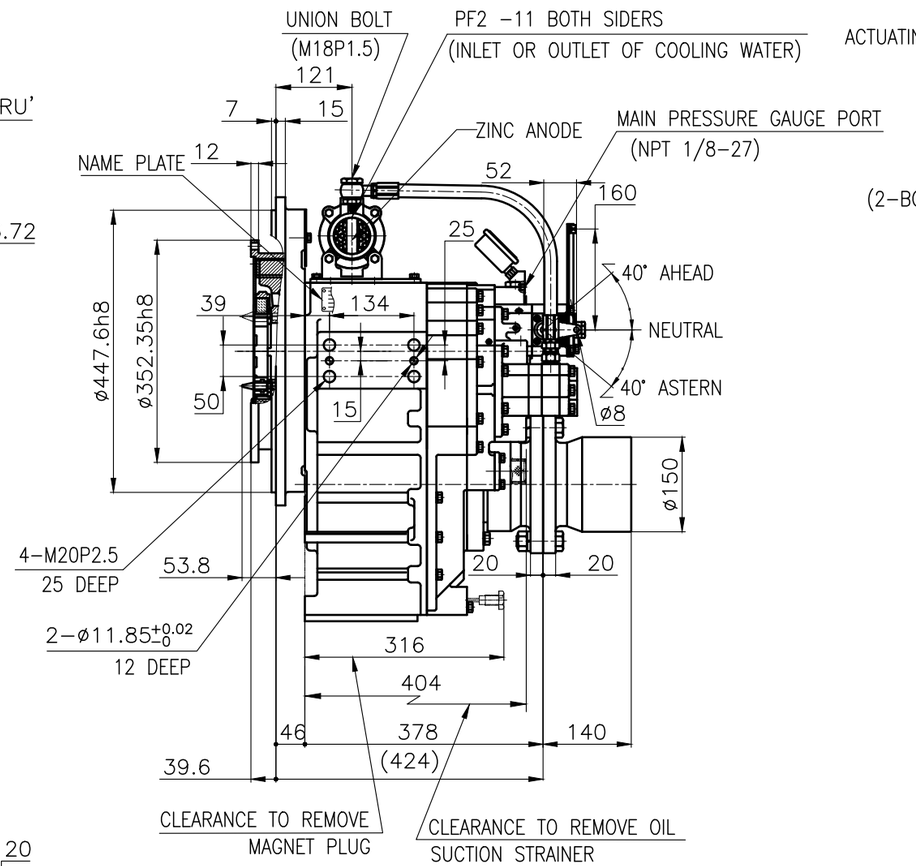

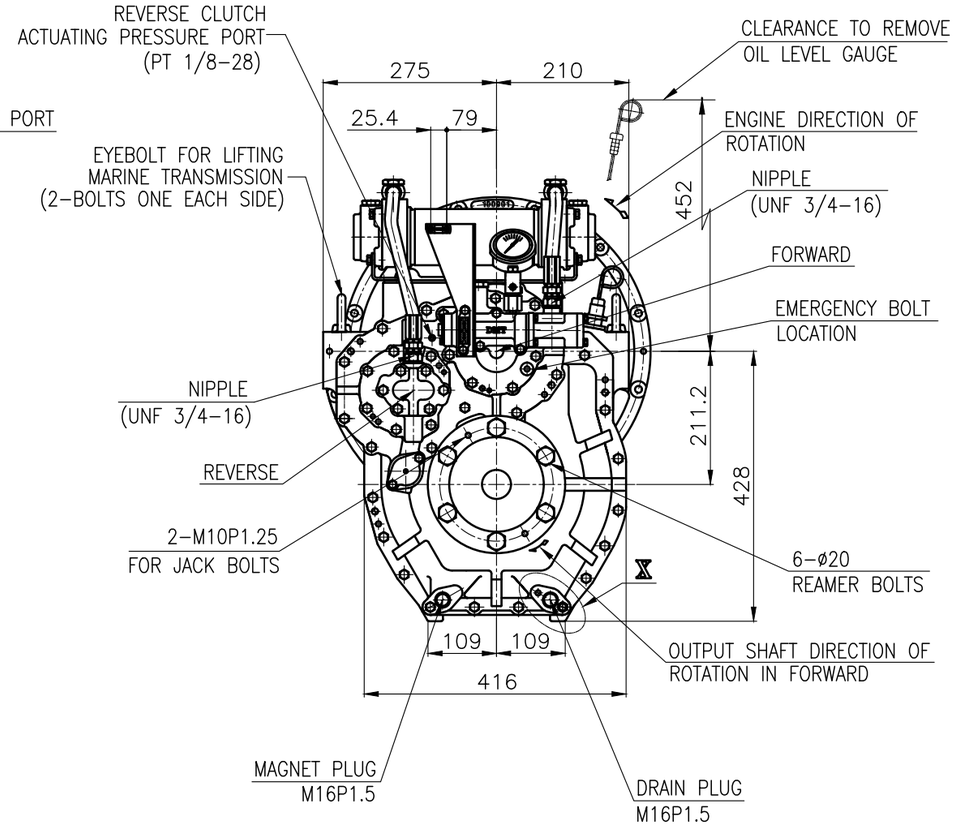

REMARK (HOT)
1.HOUSING: SAE#2
2.DRIVING RING: SAE 11.5"
3.COUPLING TYPE : DUAL STAGE
4.APPLICATION ENGINE : STANDARD

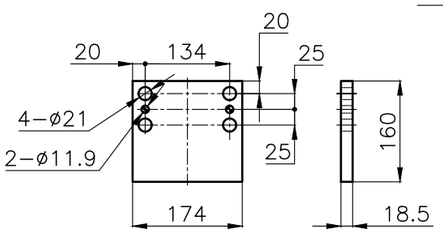

BRACKET DIMENSION

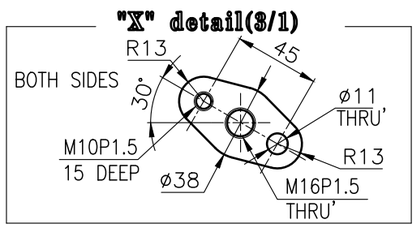

공통공차 TOLERANCE ON		
분수 FRACTIONS	소수 DECIMALS	각도 ANGLES
± —	± —	± —

일반공차 절삭가공			
구분	조급	중급	정급
1 초과 4 이하	± 0.3	± 0.1	± 0.05
4 16	± 0.5	± 0.2	± 0.07
16 63	± 0.7	± 0.3	± 0.1
63 250	± 1.2	± 0.5	± 0.2
250 1000	± 2.0	± 0.8	± 0.3

번호 NO.	품번 PART NO.	품명 PART NAME	개수 Q'TY	재질 MATERIAL	규격 SIZE	비고 REMARKS

재질 MATERIAL	—		
작성 DATE 2018.06.29	척도 SCALE N/S		
승인 APPROVED BY	검도 CHECKED BY	제도 DRAWN	설계 DESIGNED
JK.Kim	TH.Cha	GH.Park	

형식 TYPE	DMT150H		원도번 ORIGINAL DWG. NO.
품명 NAME	MARINE TRANSMISSION		
도번 DWG. NO.	15000GA~E-2115DCH		개정(REV.) 000
크기 SIZE	A3	코-드 번호 CODE ID. NO.	

D-I INDUSTRIAL

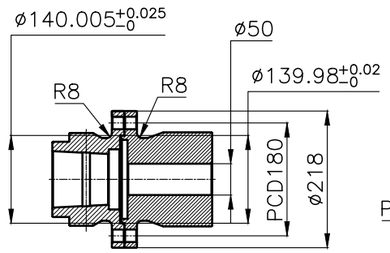

OUTPUT SHAFT COUPLING & PROPELLER COUPLING DIMENSION

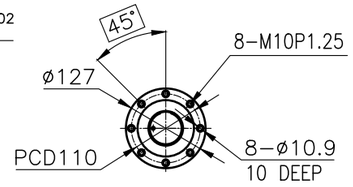

INPUT COUPLING DIMENSION

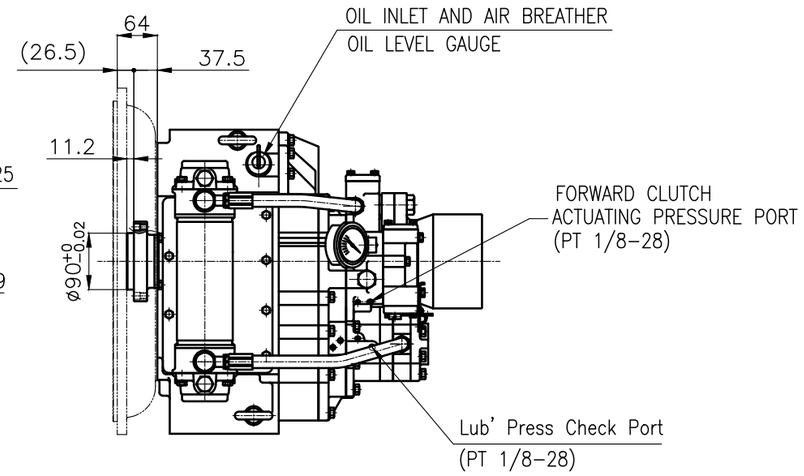

DMT 150H MARINE TRANSMISSION SPECIFICATION		
GEAR RATIO	1.83, 2.09 , 2.51 , 3.08 , 3.43	
TOTAL WEIGHT	APPROX. 287 kg(DRY)	
OIL CAPACITY	APPROX. 5.5 L	
OIL VISCOSITY	SAE # 30	
OIL PRESSURE	1.96 ~ 2.54 MPa	CLUTCH OIL
DIRECTION OF ROTATION IN FORWARD	INPUT	C.C.W VIEWED FROM THE STERN
	OUTPUT	C.W VIEWED FROM THE STERN
OIL CHANGE INTERVAL	THE FIRST 100HOURS OF INITIAL OPERATION	
	AND EVERY 1000HOURS THEREAFTER	
SHIFTING LIMIT	UNDER 50% OF THE RATED ENGINE SPEED	
OIL COOLER	WATER FLOW 40 ~ 60L/min	
	TEMPERATURE OF COOLING WATER	MAX 32°C
OPERATING TORQUE OF SHIFTING LEVER		UNDER 2.94Nm

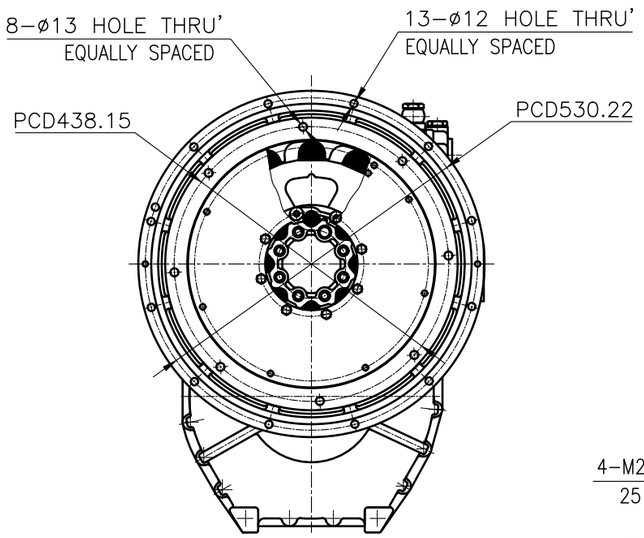

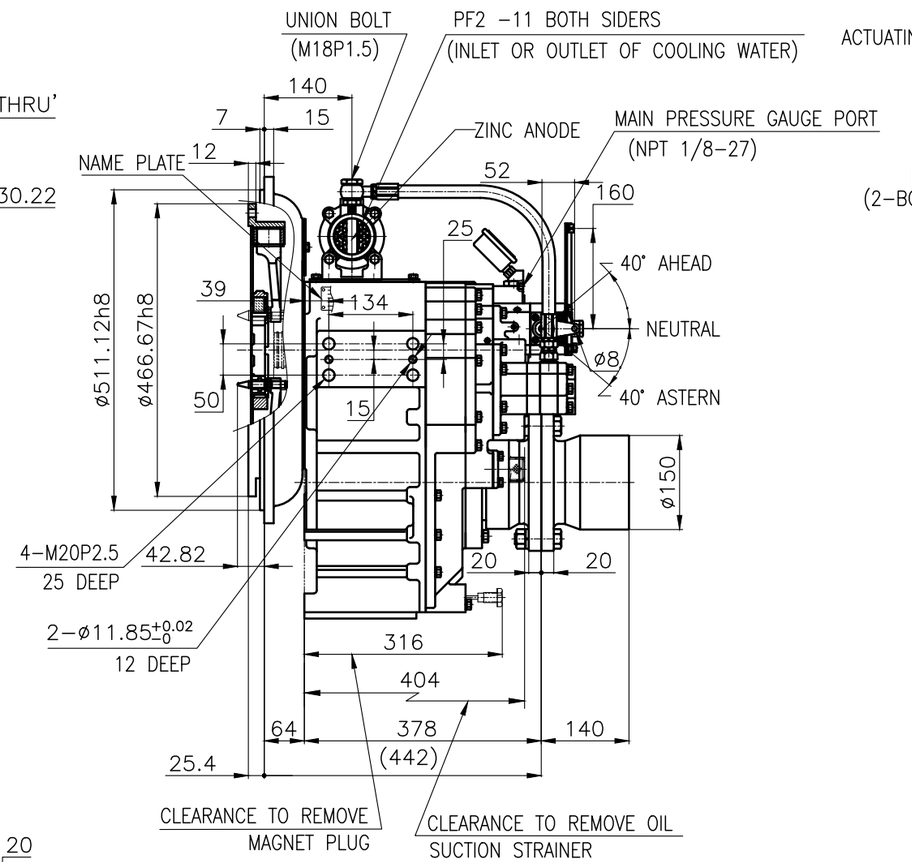

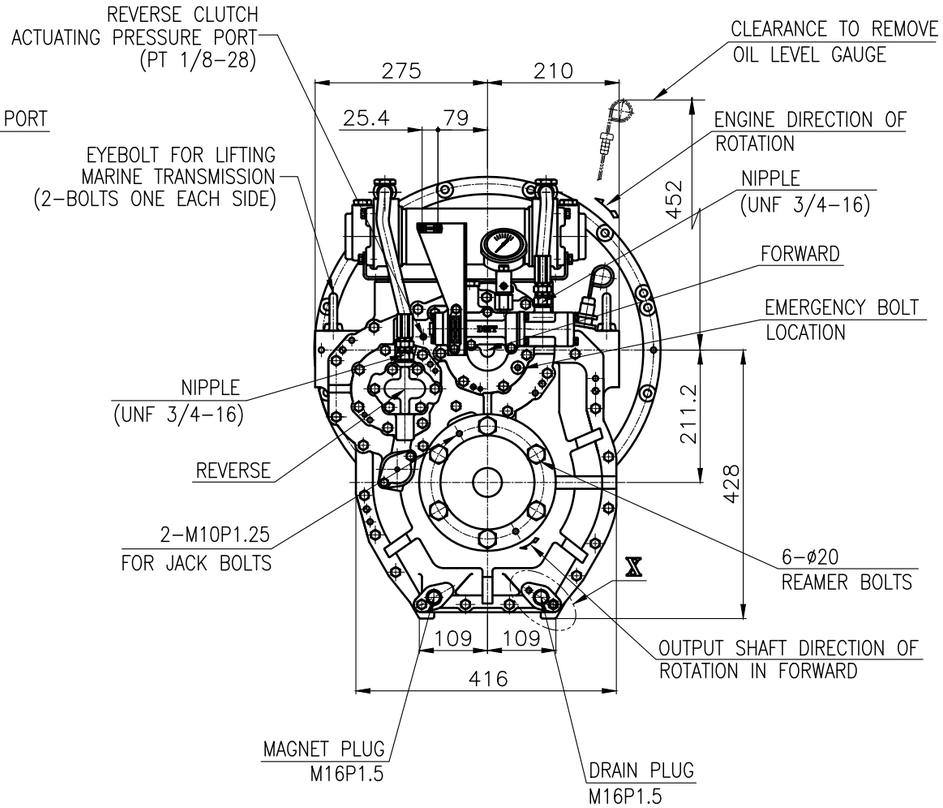

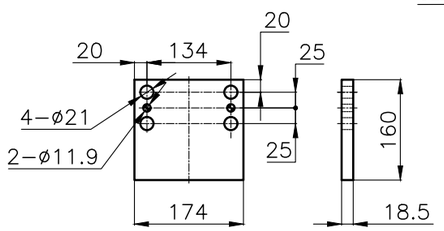

BRACKET DIMENSION

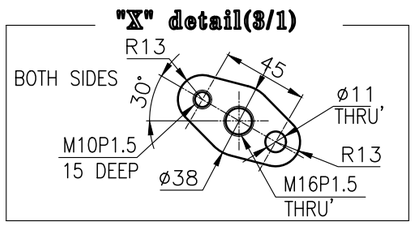

REMARK (HOT)
1.HOUSING: SAE#1
2.DRIVING RING: SAE 14"
3.COUPLING TYPE : DUAL STAGE
4.APPLICATION ENGINE : STANDARD

공통공차 TOLERANCE ON			
분수 FRACTIONS	소수 DECIMALS	각도 ANGLES	
± —	± —	± —	
일반공차 절삭가공			
구분	조급	중급	정급
1 초과 4 이하	± 0.3	± 0.1	± 0.05
4 16	± 0.5	± 0.2	± 0.07
16 63	± 0.7	± 0.3	± 0.1
63 250	± 1.2	± 0.5	± 0.2
250 1000	± 2.0	± 0.8	± 0.3

번호 NO.	품번 PART NO.	품명 PART NAME	개수 Q'TY	재질 MATERIAL	규격 SIZE	비고 REMARKS
재질 MATERIAL	—		형식 TYPE	DMT150H		원도번 ORIGINAL DWG. NO.
	작성 DATE 2018.06.29	척도 SCALE N/S	품명 NAME	MARINE TRANSMISSION		
승인 APPROVED BY	검도 CHECKED BY	제도 DRAWN	설계 DESIGNED			
JK.Kim	TH.Cha	BJ.Moon	도번 DWG. NO.	15000GA~E-114DCH		개정(REV.) 000
D-I INDUSTRIAL			크기 SIZE	A3	코드번호 CODE ID. NO.	

DMT 150H MARINE TRANSMISSION SPECIFICATION			
GEAR RATIO	1.83, 2.09 , 2.51 , 3.08 , 3.43		
TOTAL WEIGHT	APPROX. 287 kg(DRY)		
OIL CAPACITY	APPROX. 5.5 L		
OIL VISCOSITY	SAE # 30		
OIL PRESSURE	1.96 ~ 2.54 MPa	CLUTCH OIL	
DIRECTION OF ROTATION IN FORWARD	INPUT	C.C.W VIEWED FROM THE STERN	
	OUTPUT	C.W VIEWED FROM THE STERN	
OIL CHANGE INTERVAL	THE FIRST 100HOURS OF INITIAL OPERATION		
	AND EVERY 1000HOURS THEREAFTER		
SHIFTING LIMIT	UNDER 50% OF THE RATED ENGINE SPEED		
OIL COOLER	WATER FLOW 40 ~ 60L/min		
	TEMPERATURE OF COOLING WATER	MAX 32°C	
OPERATING TORQUE OF SHIFTING LEVER		UNDER 2.94Nm	

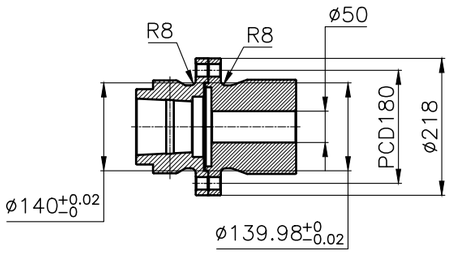

OUTPUT SHAFT COUPLING & PROPELLER COUPLING DIMENSION

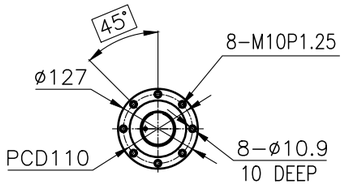

INPUT COUPLING DIMENSION

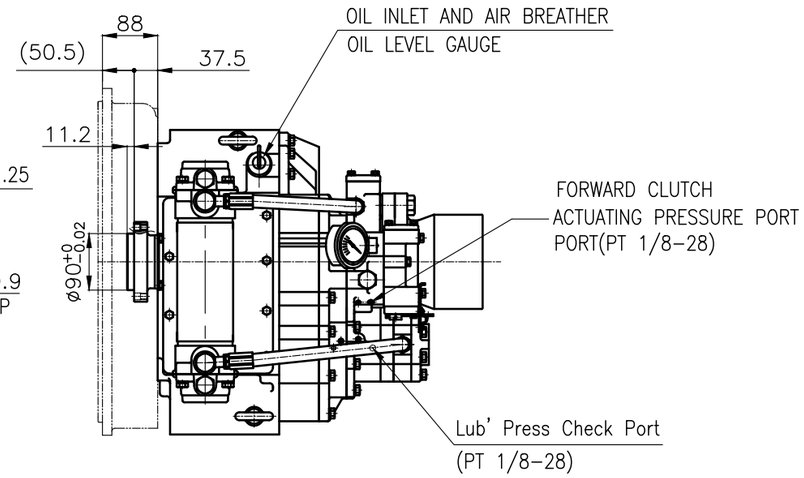

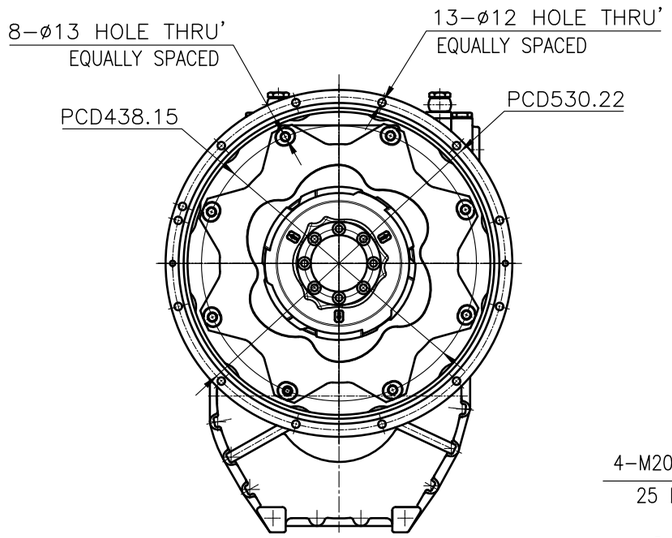

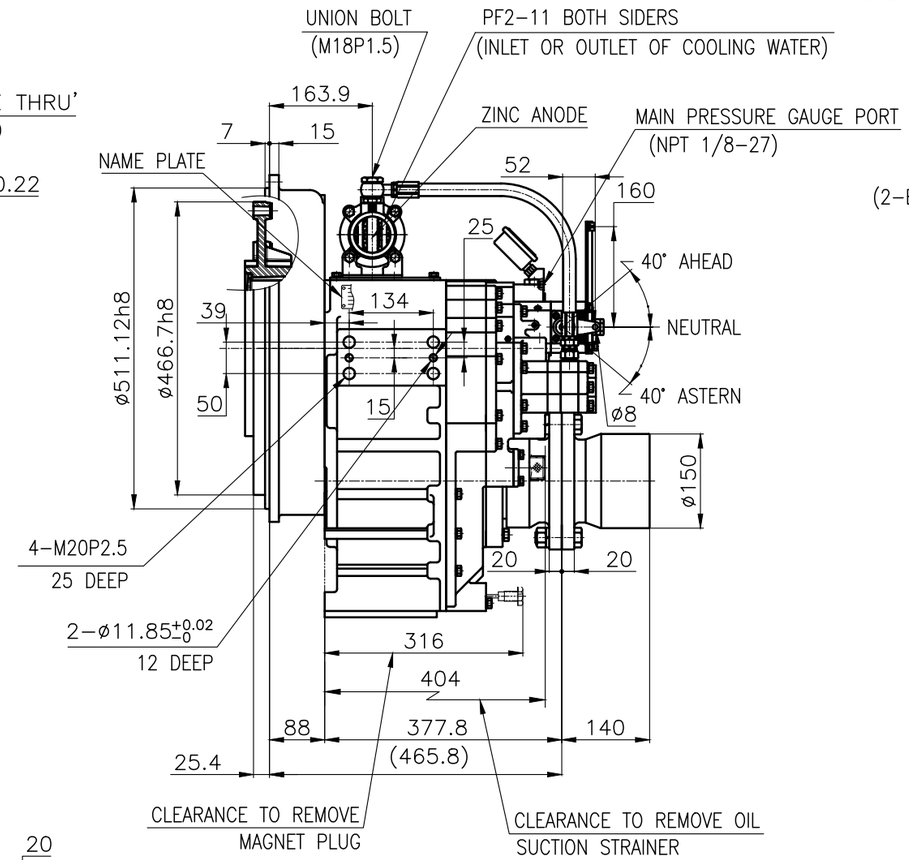

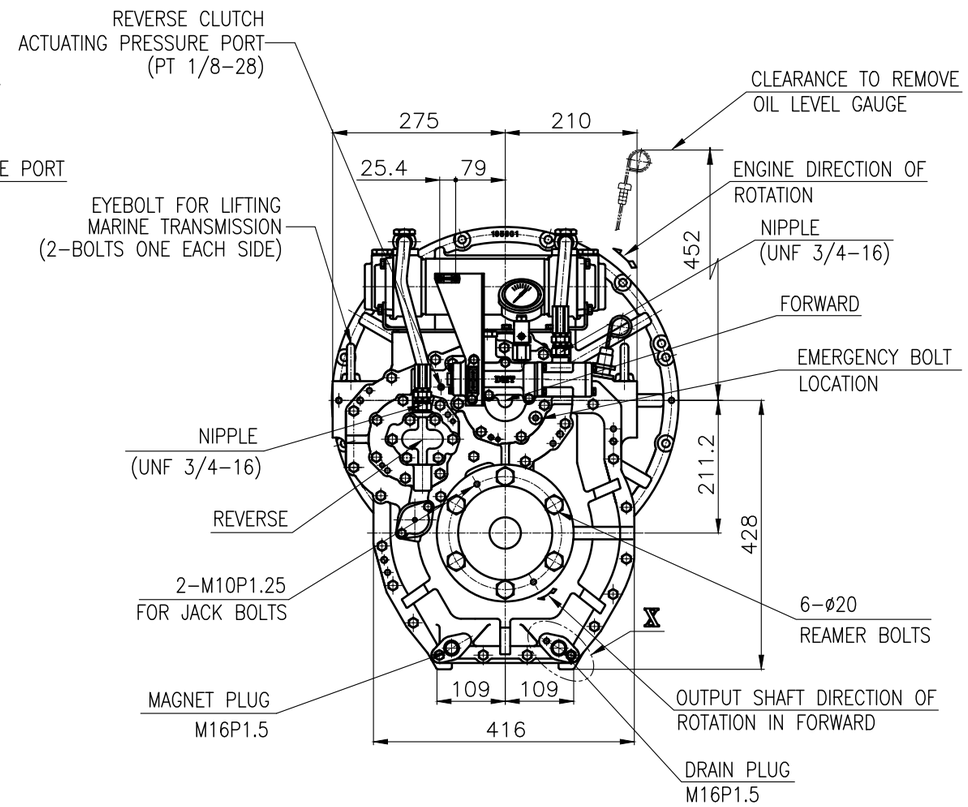

REMARK (HOT)
1.HOUSING: SAE#1
2.DRIVING RING: SAE 14"
3.COUPLING TYPE
−CENTA Flex Coupling : 77216801
4.APPLICATION ENGINE : STANDARD

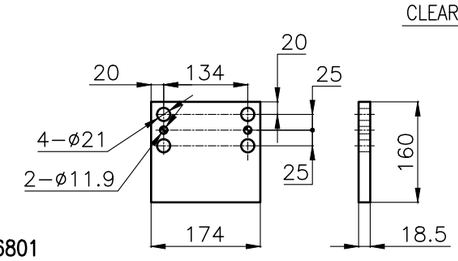

BRACKET DIMENSION

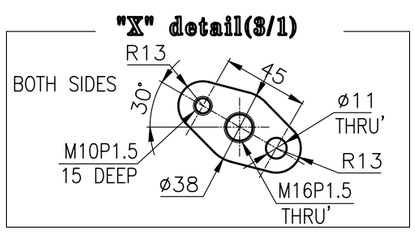

공통공차 TOLERANCE ON			
분수 FRACTIONS	소수 DECIMALS	각도 ANGLES	
± —	± —	± —	
일반공차	절삭가공		
구분	조급	중급	정급
1 초과 4 이하	± 0.3	± 0.1	± 0.05
4 16	± 0.5	± 0.2	± 0.07
16 63	± 0.7	± 0.3	± 0.1
63 250	± 1.2	± 0.5	± 0.2
250 1000	± 2.0	± 0.8	± 0.3

번호 NO.	품번 PART NO.	품명 PART NAME	개수 Q'TY	재질 MATERIAL	규격 SIZE	비고 REMARKS
재질 MATERIAL	—		형식 TYPE	DMT150H		원도번 ORIGINAL DWG. NO.
	작성 DATE 2018.06.29	척도 SCALE N/S	품명 NAME	MARINE TRANSMISSION		
승인 APPROVED BY	검도 CHECKED BY	제도 DRAWN / 설계 DESIGNED	도번 DWG. NO.	15000GA~E−114CFRH		개정(REV.) 000
JK.Kim	TH.Cha	CH.Baek	크기 SIZE	A3	코드번호 CODE ID. NO.	

D-I INDUSTRIAL

SHEET 1 OF 1

동이기술−004(841×594)

15000GA~E−114CFS 개정(REV.) 000 DWG.NO. 품명