MARINE ENGINE

SM-94

4 cilindros en línea 94.0 CV (69 kW) 2500 R. P. M.

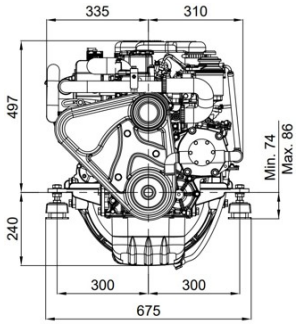

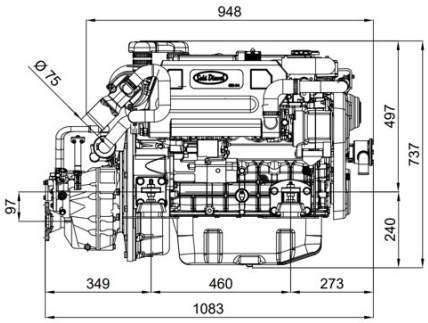

SM-94 Engine TM-345 2.00:1 Gbox.

Technical specifications

Base engine manufacturer	Mitsubishi
Type	Diesel, 4 stroke
Number of cylinders	4, in line
Intake system	Turbocharged
Bore x Stroke	94 mm x 120 mm (3.7 in x 4.72 in)
Total displacement	3331 cc
Compression ratio	19:1
Intermittent powerSN_ (ISO3046/1)	94.0 CV (69 kW)
Continuous power	84.0 CV (62.1 kW)
Max RPM	2500
Injection system	Mechanical and direct
Starter motor	12 V (2.2 kW)
Alternator	95 A (12 V)
Maximum operating angle	15 º
Rotation (viewed from flywheel side)	Counterclockwise
Cooling system	Sea water heat exchanger and coolant closed circuit
Dry weight without gearbox	308 Kg (679.0 lb)
Sea water hose inner diameter	32 mm (1.26 in)
Fuel feeding hose inner diameter	8 mm (0.31 in)
Fuel return hose inner diameter	8 mm (8 in)
Exhaust hose inner diameter	75 mm (2.95 in)
Certifications and emissions	-
Emission compliance	BSO II

Performance curves

Crankshaft torque

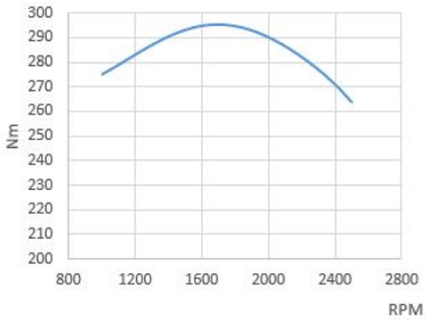

Power (ISO 3046/1)

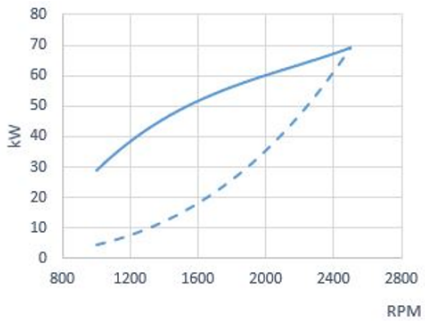

Fuel consumption

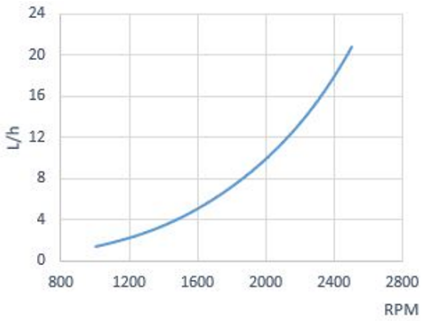

1 kW ≈ 1,36 CV 1 kW ≈ 1,36 HP (metric) 1 kW ≈ 1,36 CH ——— Engine Power - - - - - Propulsion Power

Panel

Panel SSG 30 12V BLANCO Standard

- Revolution counter Ø 85mm
- 1.5" LCD multifunction display
- Coolant temperature gauge
- Oil pressure gauge
- Battery voltage indicator
- High coolant temperature alarm
- Low oil pressure alarm
- Battery charge and voltage alarm
- Preheating indicator
- IP65 protection
- Glass anti-fog 5-position key Dimensions: 255 x 160 mm

Accessories

Standard equipment

- Instrument panel SSG 30
- 4 m electrical extension lead
- Silentblocks
- Oil extraction pump
- Owner´ s manual and spare parts manual

Optional equipment & kits

- Twin instrument panel installation
- Twin alternator
- Earth isolated electrical system
- Dry exhaust system
- Keel cooling
- Power takeoff shaft or pulley
- Heater inlet
- Drivetrain: propeller, shaft, stern tube
- Water and fuel filters
- Water, exhaust and die

Gearboxes

Model	Type	Output °	Reductions (light Duty)	Reductions (heavy Duty)	Engine weight with gearbox
TM-170	Hydraulic	0°	1.50:1-2.04:1-2.50:1-2.94:1	1.50:1-2.04:1-2.50:1-2.94:1	388 Kg (856 Lbs)
TM-345	Hydraulic	0°	1.54:1-2.00:1	-	337 Kg (744 Lbs)
TM-345A	Hydraulic	8°	1.54:1-2.00:1	-	337 Kg (744 Lbs)
TM-485A1	Hydraulic	8°	1.51:1-2.09:1-2.40:1	1.51:1-2.09:1-2.40:1	349 Kg (769 Lbs)
TM-880A	Hydraulic	10°	1.53:1-2.08:1-2.60:1	1.53:1-2.08:1-2.60:1	367 Kg (809 Lbs)
TM-93	Hydraulic	0°	1.51:1-2.09:1-2.40:1-2.77:1	1.51:1-2.09:1-2.40:1-2.77:1	366 Kg (807 Lbs)
TM-93A	Hydraulic	8°	1.51:1-2.09:1-2.40:1	-	366 Kg (807 Lbs)
TMC-260	Mechanical	0°	-	-	330 Kg (729 Lbs)
ZF 68 IV	Hydraulic	12°	1.29:1-1.56:1-2.00:1-2.48:1	1.29:1-1.56:1-2.00:1-2.48:1	375 Kg (827 Lbs)
ZF SD 15	Mechanical	0°	2.50:1	-	419 Kg (923 Lbs)

Authorized dealer

www.solediesel.com
info@solediesel.com

Detailed drawings, brochures and manuals are available on the web solediesel.com. All rights reserved.
Technical specifications, data and presentation are subjected to variations, changes and updates without prior notice.
Non-contractual information.