Genset 45 GT/GTC & 54 GTA/GTAC Type Approval Certificate

VERSION 2024-3

PART LIST

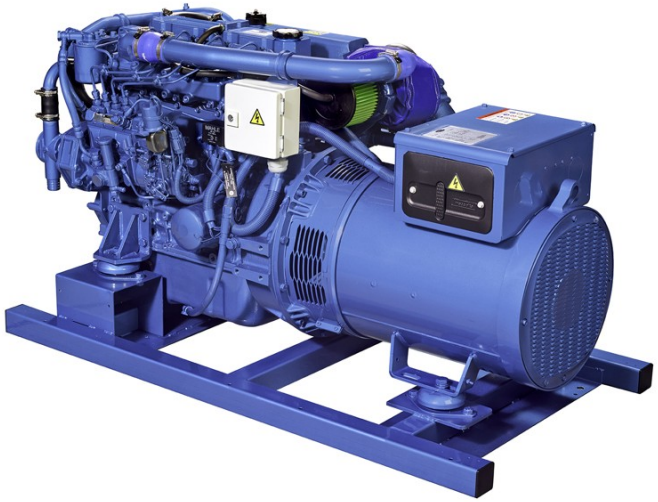

PARTS LIST CATALOGUE

NORMS TO PLACE AN ORDER

For fast and more efficient service, please specify the following information on spare parts or ders that must be preferably done by e-mail as specified below:

1- Engine model: As shown in identification plate

2- Engine serial number: As shown in identification plate and stamped on crankcase

3- Item description + part number + quantity required

Spare parts requests must be adressed to :

orders@solediesel.com

Telf.: +34 93 775 44 05

The components shown in the catalog have:

- Figure: Number by which they are represented in scheme
- Description: Trade name of the component
- Quantity: Total number of parts used in the assembly of the part represented (may differ from the total minimum quantities)

Hoses, indicates the total length in meters

The diagrams shown in this catalog of spare parts, have only the purpose to identify the piece in question, its representation is not meaningful and may differ from the actual piece.

In case of doubt, contact Solé Diesel, or your authorized dealer.

The parts i / or references in this catalog are subject to change without notice.

SOLÉ, S.A.

C-243b, km, 2 - P.O. BOX 25

08760 Martorell (Barcelona) Spain

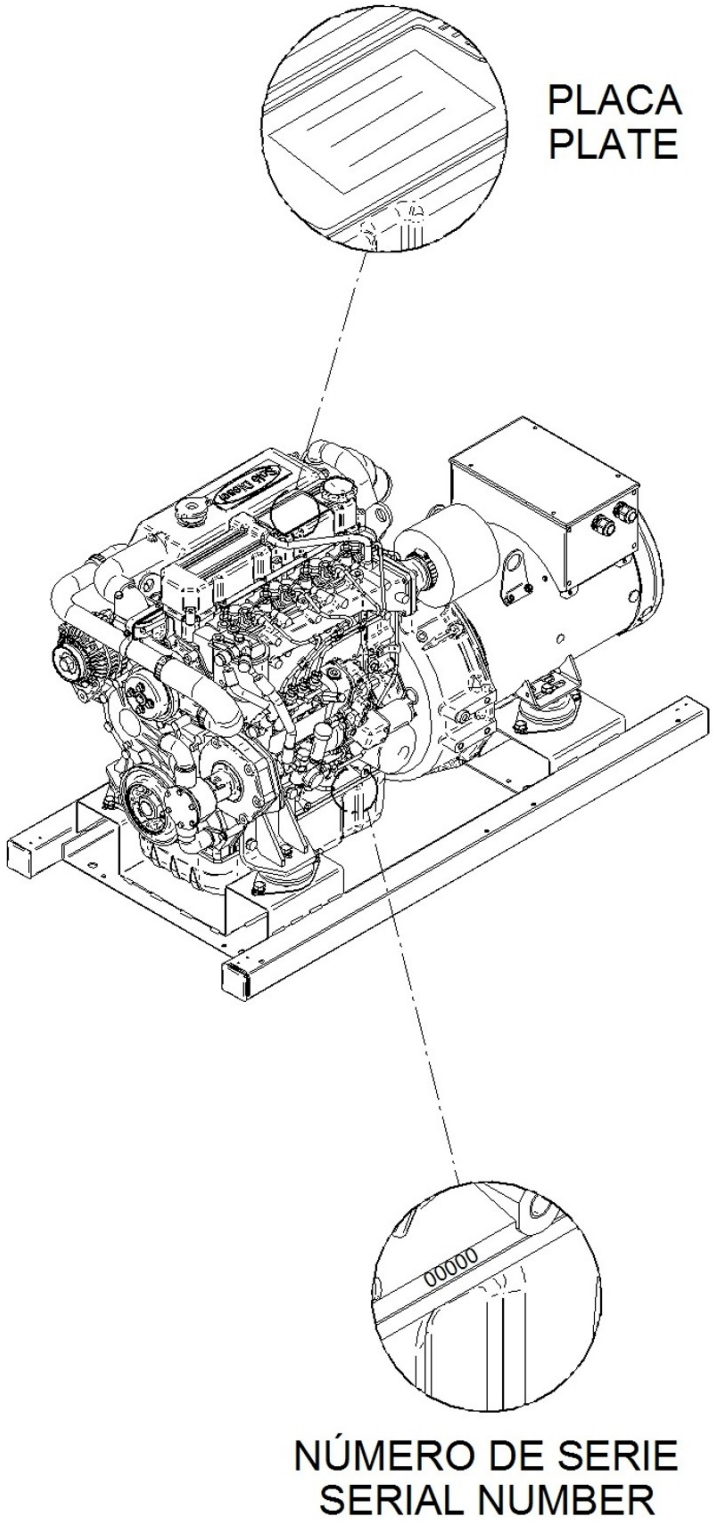

Index

Engine Body
- Head, Cylinder
- Rocker Cover & Breather
- Valve Drive
- Timing Parts
- Gear Case
- Cranckcase
- Flywheel Housing
- Piston & Connectiong Rod
- Crankshaft & Flywheel
- Oil System
- Oil Pan
- Engine Brackets
- Drive Belt Guard For Genset Without Canopy

Inlet & Exhaust
- Inlet
- Turbocharger

Cooling System
- Water Pump
- Cooler Pipes
- Water Cooler Assy MINI-74/SM-56 TAC
- Wet Exhaust
- Cross Brace Pump from 74 to 616

Fuel System
- Fuel Pipe And Fuel Leak Alarm
- Injection Nozzle
- Governor Parts
- Fuel Supply Parts

Electrical System
- Electrical System 12V
- Electrical System 24V
- Parallel control system 12V
- Parallel control system 24V
- Control Cabinets
- Genset Extension TAC

Genset Alternator Spare Parts
- Alternator 45 GT/GTC and 54 GTA/GTAC
- Alternator Spare Parts TYPE C From 30/12/2021
- Spare Part List Alternator Type B Upto 29/12/2021

Genset Alternator Kit
- Alternator Kit Without Canopy
- Alternator Kit With Canopy
- Chassis

Canopy Spare Parts
- Cabin
- Canopy Kit

Maintenance Kit
- Gasket Kit
- Pipe Rubber Set, Water Line SM-56 Genset
- Repair Kit Water Pump 1"
- Special Tools
- Special Tools

Engine Body

D_GU01_1_1 Head, Cylinder

Fig.	Ref.	Qty.	Descr.	Obs	From	UpTo
1	17B21005	1	Head Assy, Cyl			
2	13121003	7	Cap SealING			
3	17220006	12	Cap, Sealing			
4	17421004	1	Gasket,Cylinder Head			
5	17421061	4	Seat,Valve,IN			
6	17421062	4	Seat,Valve,Exhaust			
7	17421002	8	Guide,Valve			
8	17421005	17	Bolt,cylinder head			
9	17420014	1	Eye,Lifting,Front			
10	17421018	1	Eye,Lifting;Head Rea			
11	17421011	1	Gasket			
12	17821012	2	Bolt,W/Washer			
13	17421012G.1	4	Bolt W/Washer (Generator)			
14	60900972	1	High Coolant, 2 Poles 96°			
15	60900999.1	1	Connection M14X1,5 5/8" EXA.19 L=25			
16	56000073	1	Copper Washer 16-23-1,5			

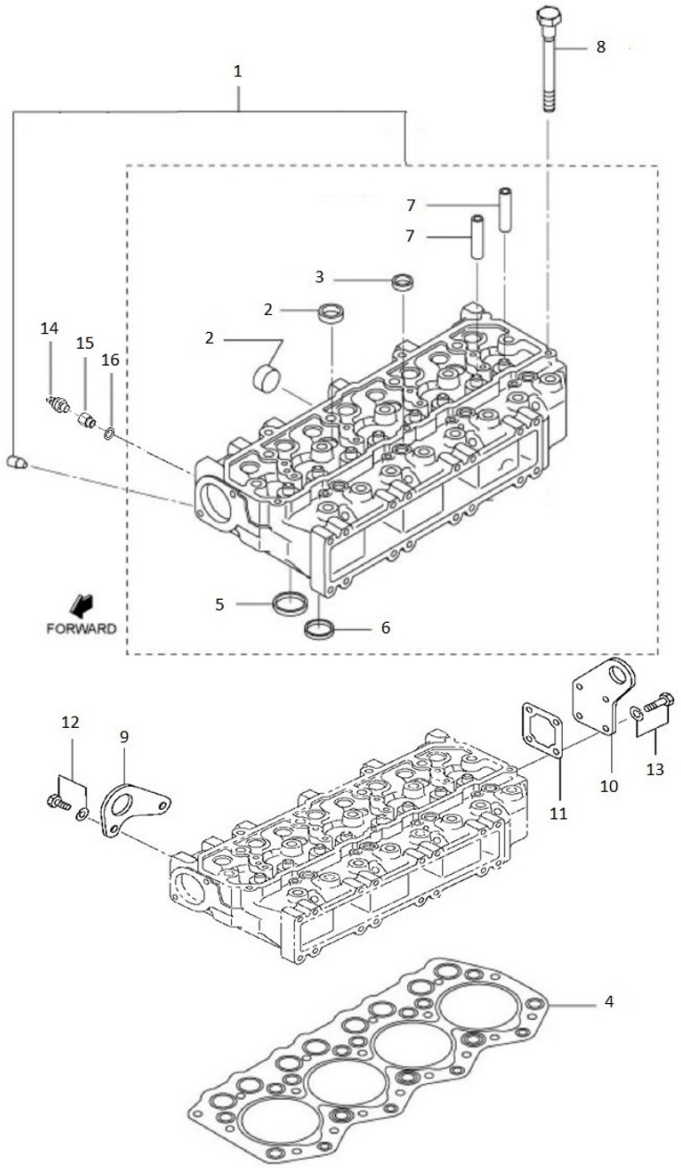

Engine Body

D_SM56GTDN_01_2 Rocker Cover & Breather

Fig.	Ref.	Qty.	Descr.	Obs	From	UpTo
1	17B21006	1	Cover Assy,Rocker			
2	17421010	1	Rocker Cover Gasket			
3	17421014G.1	5	Bolt W/Washer (Generator)			
4	17221003G	1	Cap Oil Filler			
5	54081012	5	Clamp DIN 3017 12-22/9 W4			
6	17B21009	1	Hose,Breather			
7	59071161	1	Clamp RSGU 1 16/12 W1			
8	17524025G	1	Bolt			
9	17B10010	1	Eng. Exit Breather Pipe			
10	17B10021	1	HOSE, BY-PASS			
11	17B10019	1	Bracket, pipe			

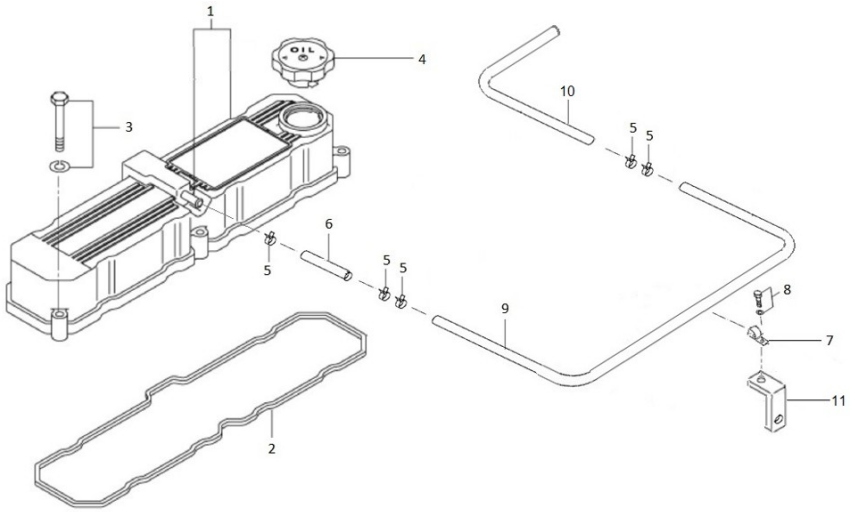

Engine Body

D_GU01_1_3 Valve Drive

Fig.	Ref.	Qty.	Descr.	Obs	From	UpTo
1	17422055.1	4	Valve,Inlet			
2	17422056	4	Exhaust Valve			
3	13322028	8	Spring,valve outler			
4	17422058	8	Retainer,Upper			
5	17122059	16	Cotter,Valve			
6	13322024	8	Cap			
7	17422057	8	Seal, Valve Stem			
8	17422046	1	Shaft Assy,Rocker			
8A	13322023	2	Cap, Sealing			
9	17422048.1	4	Bracket,Rocker Shaft			
10	17422053	4	Bolt,Rocker Bracket			
11	17422142.2	8	Rocker Assy			
11A	17122044	8	Screw Adjusting			
12	17422047G.1	3	Spring,Rocker			
13	17A22116	4	Bolt			
14	17B21020	2	Ring Snap (19)			

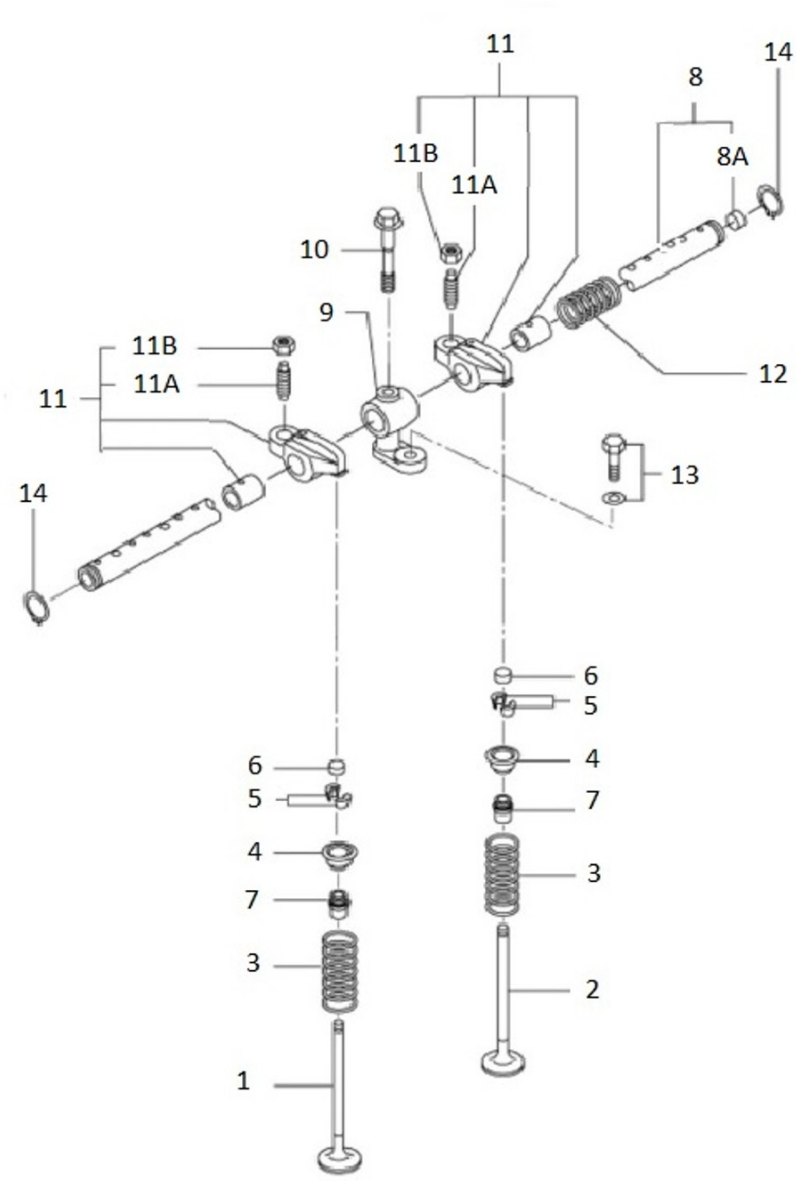

Engine Body

D_GU01_1_4 Timing Parts

Fig.	Ref.	Qty.	Descr.	Obs	From	UpTo
1	17B21021	1	Camshaft			
2	13322034	1	Key Woodruff			
3	17B21022	1	Plate,Thrust			
4	17422037G.1	2	Bolt W/Washer (Generator)			
5	17122061	8	Tappet			
6	17122041	8	Rod, push			
7	17822019	1	Gear, CrankShaft			
8	17422037	1	Gear,CamShaft Z=46			
9	17B21025	1	Gear,Inj.Pump			
10	17A22038	1	Gear, Assy idler			
11	17122032	1	Plate, thrust			
12	17720010	1	Bolt,W/Washer			
13	17422066	1	Gear,Oil Pump Z=31			

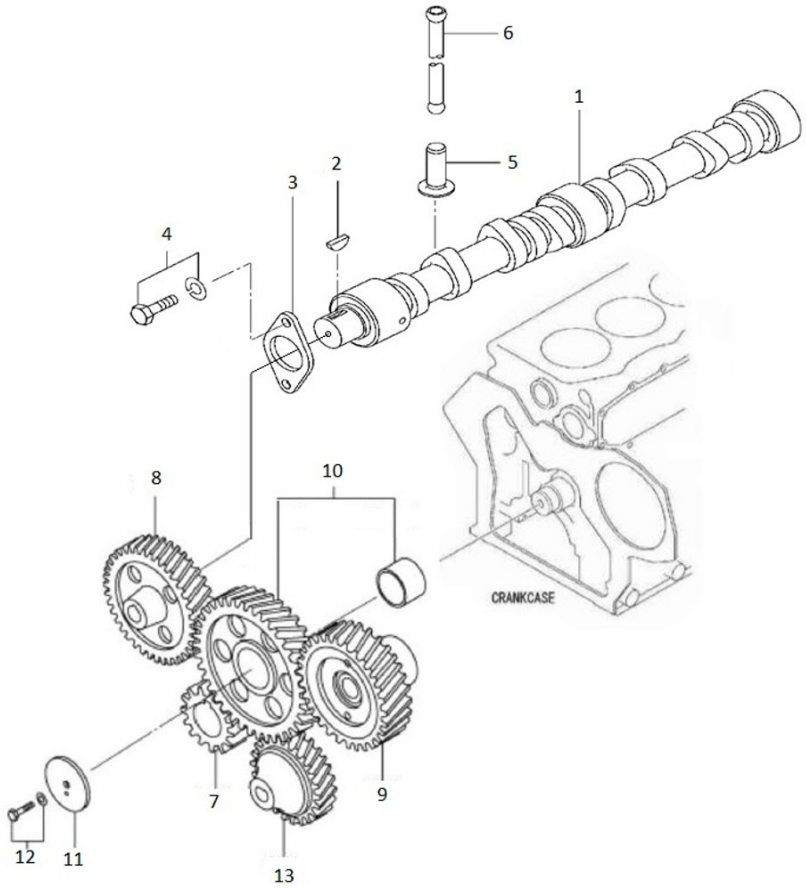

Engine Body

D_GU01_1_5 Gear Case

Fig.	Ref.	Qty.	Descr.	Obs	From	UpTo
1	17420024G.1	1	Plate,Front (Generator)			
2	17420035G	1	Case,TIMING Gear			
3	17420018	1	Gasket,Front Plate			
4	17422037G.1	5	Bolt W/Washer (Generator)			
5	17420040	1	Gasket,Gear			
6	17520047	13	Bolt,W/Washer			
7	15310072	1	CrossHead Jaw Coupling			
8	17A11026	1	Coupling Drive			
9	17422071	1	Nut,INJ.Pump			
10	17420039.1	1	Seal Assy,Oil			
11	17420047	1	O-Ring D. 140X2			
12	17410010	1	Block Water Pump			
13	13310013	1	Gasket,water pump			
14	53038008	5	Washer DIN 6798-A 8			
15	52103156	4	Bolt DIN 912 M6-16 8.8			
16	52101266	5	Bolt DIN 931 M8-65 8.8			
17	51030006	4	Washer DIN 125-6			
18	33311013	1	O-Ring D. 15X2			
NS	34711003	1	Gasket Cover			

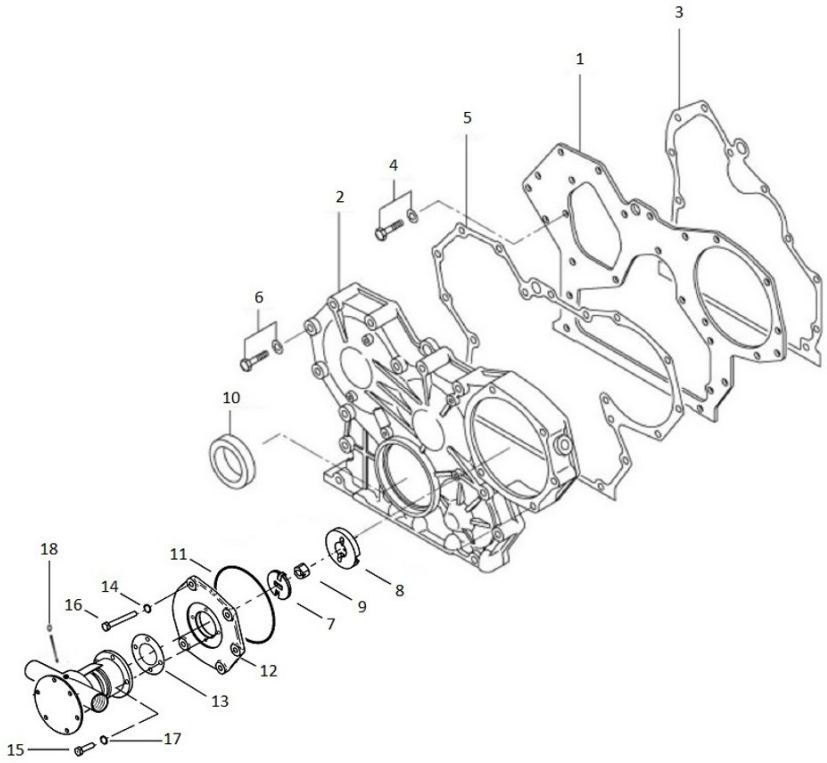

[NS] Not shown

Engine Body

D_GU01_1_6 Cranckcase

Fig.	Ref.	Qty.	Descr.	Obs	From	UpTo
1	17B21035	1	Crankcase Assy			
2	13320007	4	Cap, Sealing			
3	17420027G.1	2	Plug,TAPPERED (Generator)			
4	17421046G.3	3	Plug			
5	17A20003	4	Valve, Check STD			
6	17420013G.3	1	Plug			
7	17420036	2	Pin,Dowel			
8	13320025	2	Pin			
9	17120019	2	Pin, dowel			
10	17420012	6	Pin,Spring			
11	17420112	2	Seal,Valve			
12	17420011G.3	1	Bushing			
13	17420034	1	Shaft,IDLER			
14	13320006	10	Cap, Sealing			
15	17420009	10	Bolt Bearing Cap			
16	17820011	4	Plug, Tapered			
17	17120022	2	Plug, tapered			
18	17120021	1	Plug,taper			
19	17420109	3	Plate,THRUST.C/S STD			
20	17420110	3	Plate,THRUST.C/S +0,15			
21	17420111	3	Plate,THRUST.C/S +0,30			
22	17420003	1	METAL,MAIN Set STD			
23	17420004	1	METAL,MAIN Set -0,25			
24	17420005	1	METAL,MAIN Set -0,50			
25	17420006	1	METAL,MAIN Set -0,75			

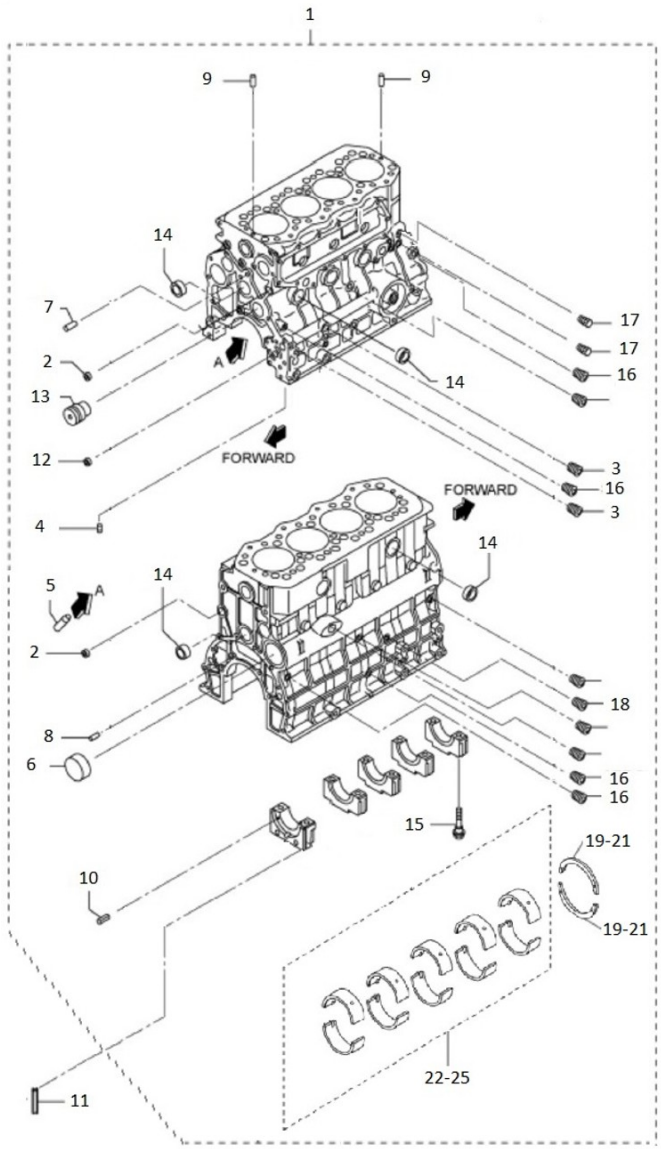

Engine Body

D_SM56GTDN_01_7 Flywheel Housing

Fig.	Ref.	Qty.	Descr.	Obs	From	UpTo
1	17A20007G.3	1	Flyweel Housing Pickup			
2	17420025	1	Gasket,Rear			
3	17327129.2	10	Bolt			
4	17420028G.1	2	Bolt,W/Washer (Generator)			
5	13320063	1	Seal Oil			
6	13320067	2	Stud			
7	17827003	2	Nut			
8	MHF251510000	2	WASHER, SPRING			
9	52211454	1	Stud ALLEN DIN913 M16x1,5-16			
11	13224045	1	Plug			
12	13120032	1	Gasket			
13	60972519	2	Magnetic Speed Sensor			

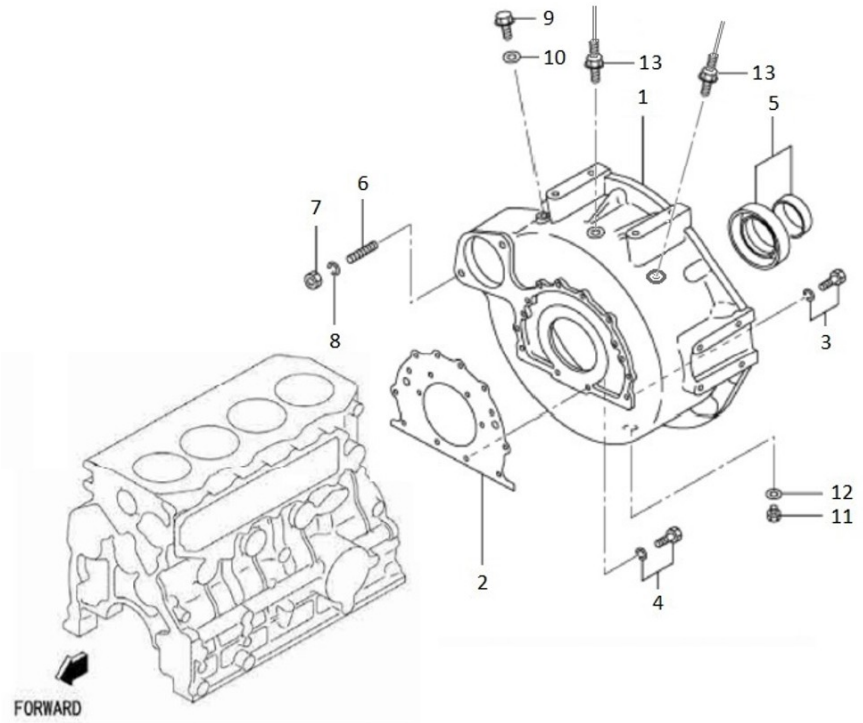

Engine Body

D_GU01_1_8 Piston & Connectiong Rod

Fig.	Ref.	Qty.	Descr.	Obs	From	UpTo
1	17A22001	4	Piston STD			
2	17A22002	4	Piston +0,25			
3	17A22003	4	Piston +0,50			
4	17422006	4	Ring Set,Piston STD.			
5	17422007	4	Ring,Piston O.S 0,25			
6	17422008	4	Ring,Piston O.S 0,50			
7	17422009	4	Pin,Piston			
8	17422010	8	Ring,Snap			
9	17822012	4	Rod Assy. Connecting			
9B	17122013	8	Bolt,connecting rod			
9C	17422033	4	Bushing,Con-Rod			
10	17422014	1	Bearing Set,Con-Rod,STD.			
11	17422015	1	Bearing Set,Con-Rod,U.S -0,25			
12	17822016	1	Bearing Set, Con-Rod, U.S 0,50			
13	17822017	1	Bearing Set, Con-Rod, U.S 0,75			

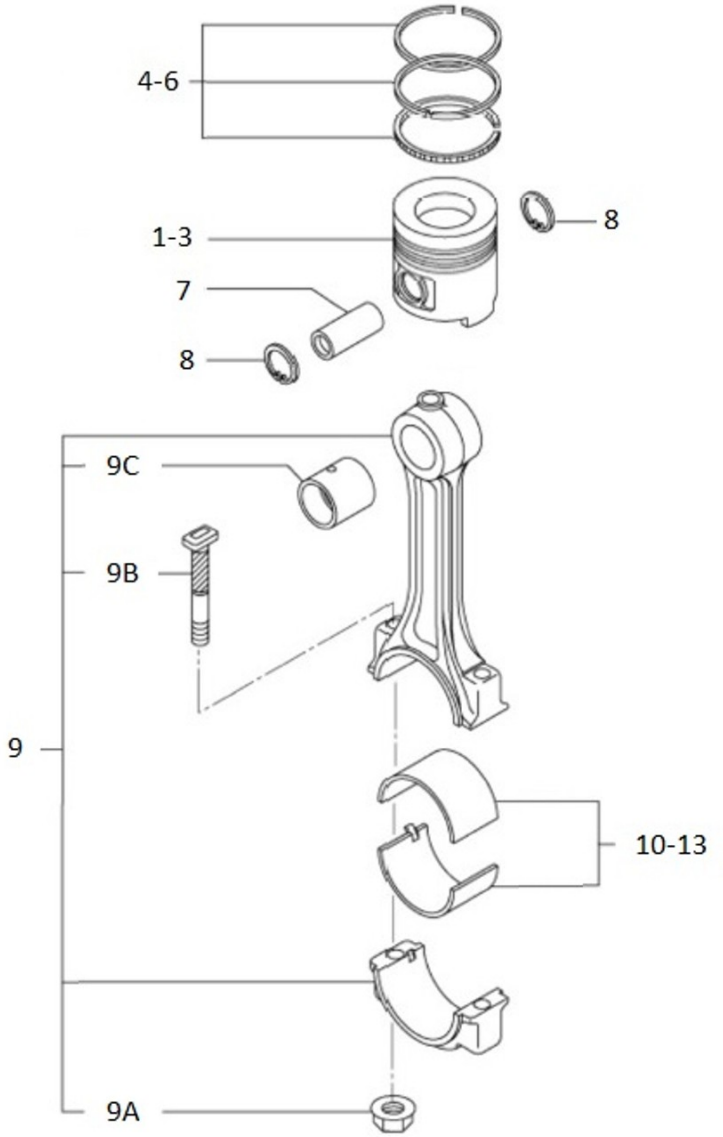

Engine Body

D_GU01_1_9 Crankshaft & Flywheel

Fig.	Ref.	Qty.	Descr.	Obs	From	UpTo
1	17B21051	1	Crankshaft Assy			
1A	13322059	2	Pin			
1B	13322034	2	Key Woodruff			
1C	17422026	1	Nut,CrankShaft			
1D	17822019	1	Gear, CrankShaft			
2	17422024	1	Pulley CrankShaft			
3	17422027	1	Flywheel Assy			
3A	17422029	1	Gear,Ring Z=122			
4	13322065	4	Bolt			
5	MHF251512000	4	WASHER,SPRING			

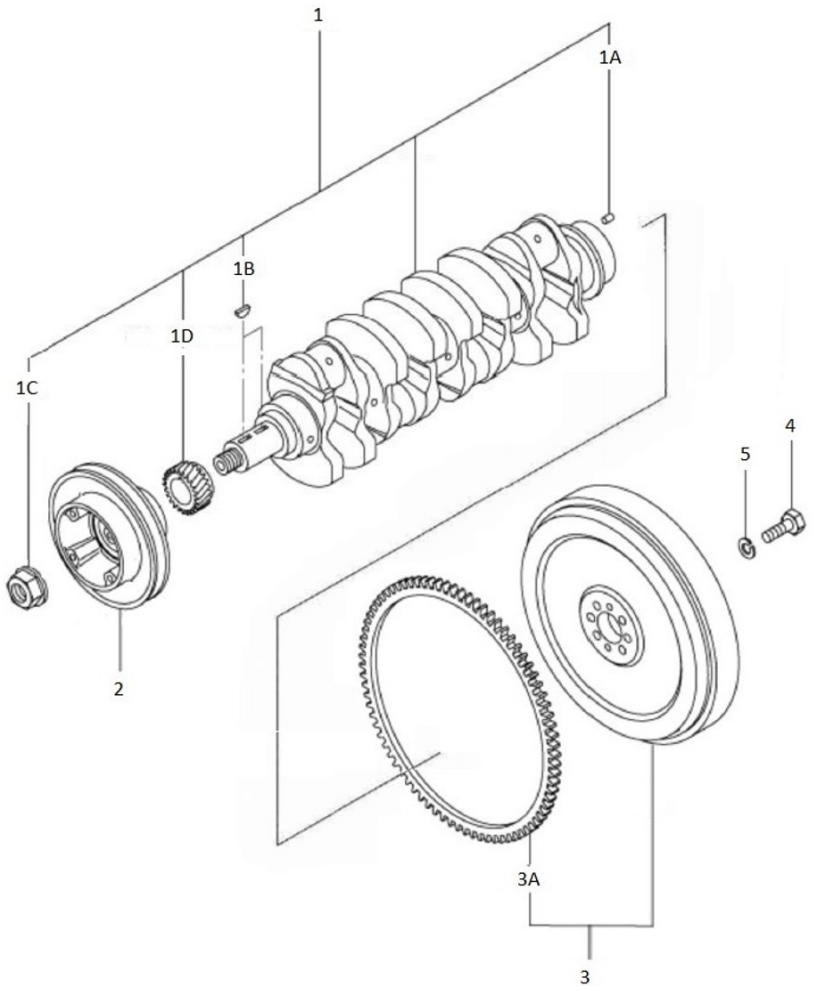

Engine Body

D_SM56GTDN_01_10 Oil System

Fig.	Ref.	Qty.	Descr.	Obs	From	UpTo
1	17424040	1	Pump Assy,Oil			
2	17424055.1	1	O-Ring			
3	17421012G.1	4	Bolt W/Washer (Generator)			
4	13122045	1	Nut			
5	MHF251510000	1	WASHER, SPRING			
6	17424052	1	STrainer,Oil			
7	17424060	3	O-Ring D. 22X2,4			
8	17422037G.1	2	Bolt W/Washer (Generator)			
9	17124071	1	Valve, Assy			
10	17424063	1	Gasket			
11	17824071	1	Valve, Assy			
12	17420017	1	Gasket			
13	17B21053	1	Cooler Assy,Oil			
14	17B21054	1	Case Assy,Oil Cooler			
15	17125008.1	4	Nut,Flange			
16	17822116	16	Bolt, Flange			
17	17822114	1	Element, Oil Cooler			
18	17822115.1	4	O-Ring			
19	17520017	2	O-Ring D. 30X3,4			
20	17822112	1	Gasket, Side Cover			
22	17424051G.1	1	CARTRIDGE, Oil (Generator)			
23	17424054	1	Union,Oil Filter			
24	17A17037	1	Conversion Adapter R 1/8 A G1/4 G1/8			
25	17A17028	1	Conversion Adapter G1/2 a 3/8			
26	56000083	1	Washer 21-26-1,5			
27	60994075	1	Temperature Sensor			
28	56000067	1	Washer 13-20-1,5			
29	6097A072	1	Compact Pressure Switch			
29A	60900956	1	10k ohm Resistor			
30	60994076	1	Marine Approved Pressure Transmitters			
31	17A17035.1	1	Conversion Adapter G1/4 a G1/8 BSPT			

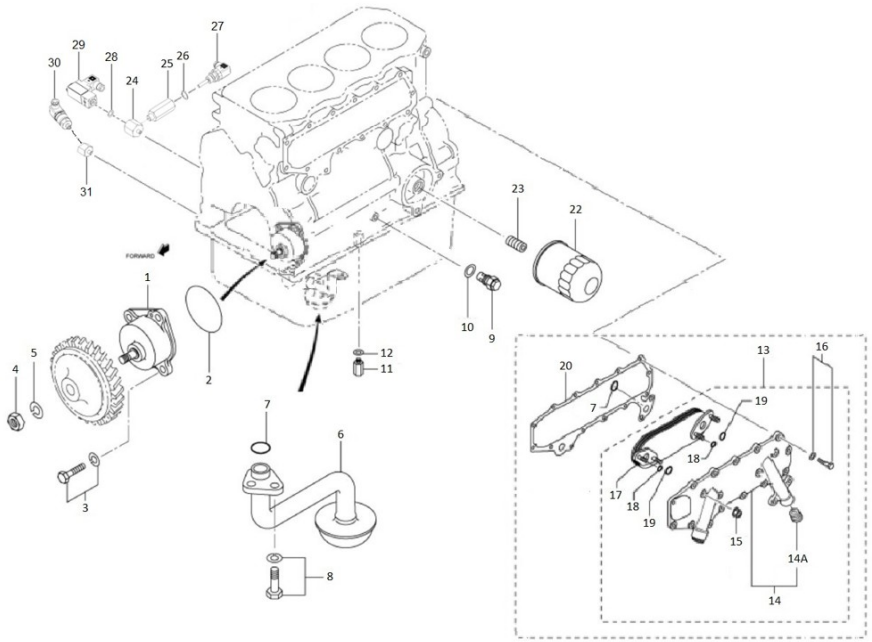

Engine Body

D_GU01_1_11 Oil Pan

Fig.	Ref.	Qty.	Descr.	Obs	From	UpTo
1	17420030	1	Oil PAN Assy			
1A	17220031	1	Plug			
1B	17420031	1	Gasket,Oil DRAIN			
2	17821012	24	Bolt,W/Washer			
3	17420029	1	Gauge Oil LEVEL			
4	12814051	1	Screw,eye			
5	56000069	2	Washer 14-20-1,5			
6	17114021	1	Extraction Hose			
7	17214022	1	Bracket, Pipe			
8	56000217	1	Washer 13-20-3			
9	16514020	1	Plug			
10	14714001	1	Oil Extraction Pump			
11	52102360	1	Bolt DIN 933 M12-35 8.8			
12	53033012	1	Washer Grower DIN 127-12			
13	51030012	1	Washer DIN 125-12			

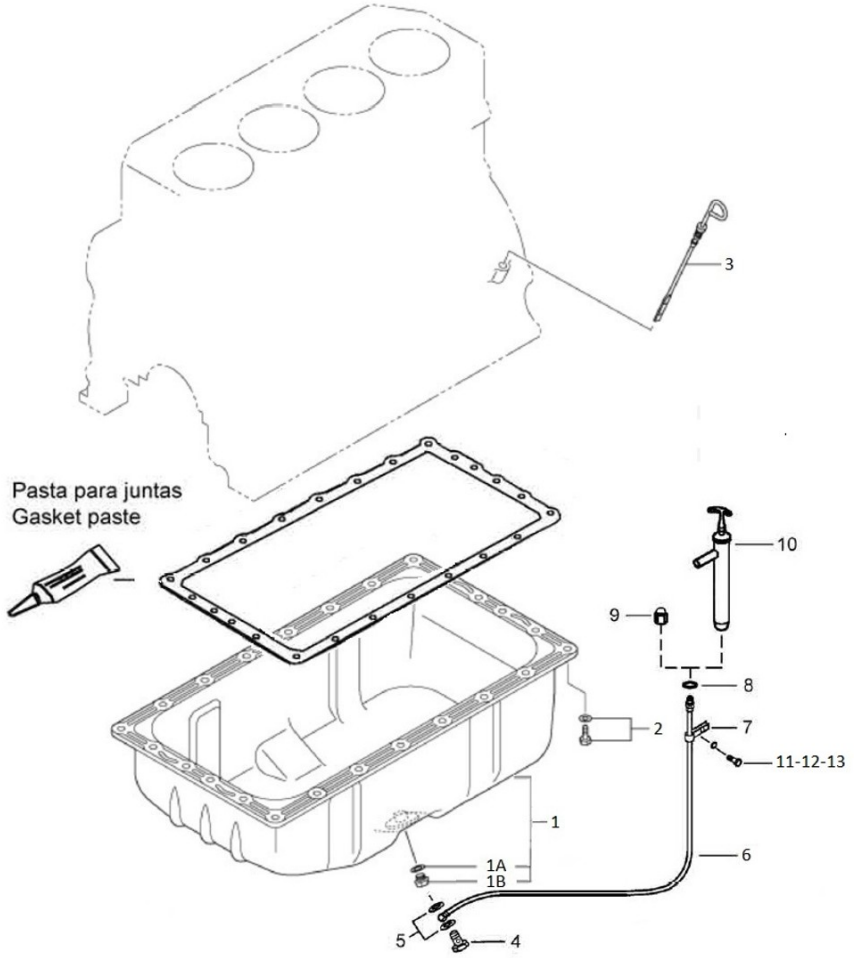

Engine Body

D_GU01_1_12			Engine Brackets			
Fig.	Ref.	Qty.	Descr.	Obs	From	UpTo
1	17410001G	2	Support ANTERIUER			
2	61674002	2	Engine Mount Type F 35 SHA M12 H 41			
2	61674005	2	Engine Mount Type F BRB 110 B50 SHA M12 H 41		14/04/2023	
3	61674001	2	Engine Mount Type F 40 SHA M16 H 41			
3	61674004	2	Engine Mount Type F BRB 110 B50 SHA M16 H 41		14/04/2023	
4	52102358	8	Bolt DIN 933 M12-25 8.8			
5	53033012	18	Washer Grower DIN 127-12			
6	51030012	18	Washer DIN 125-12			
7	52102359	8	Bolt DIN 933 M12-30 8.8			
8	52102361	2	Bolt DIN 933 M12-40 8.8			
9	52120012	8	Nut DIN 934 M12 8.8			
10	51030016	2	Washer DIN 125-16			
11	53033016C	2	Washer			
12	52102461	2	Bolt DIN 933 M16-40 8.8			

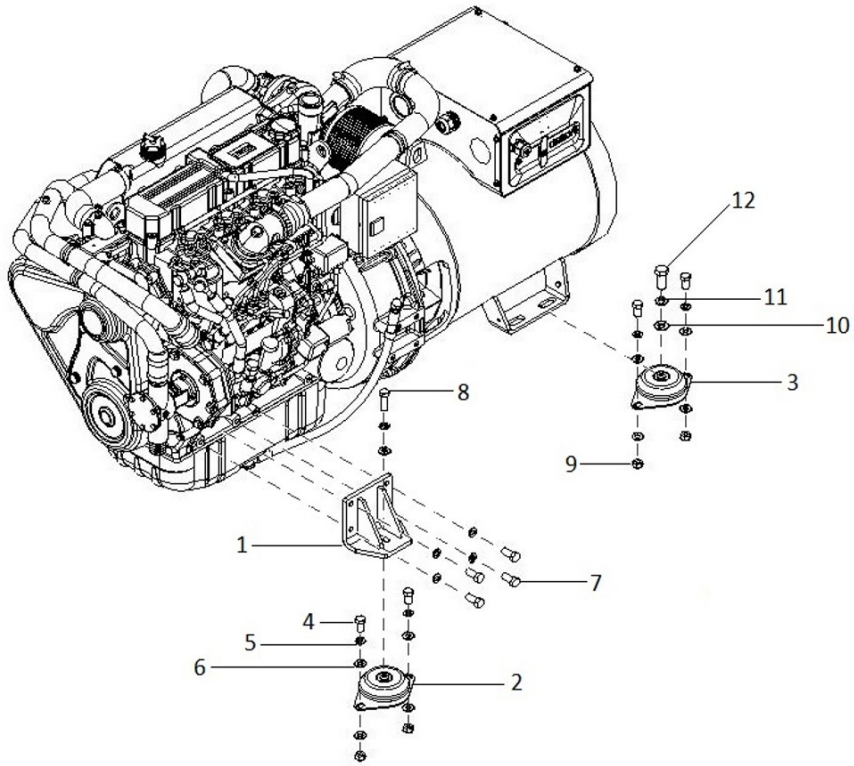

Engine Body

D_SM56GTDN_01_13 Drive Belt Guard For Genset Without Canopy

Fig.	Ref.	Qty.	Descr.	Obs	From	UpTo
1	17810021	1	Belt Protection			
2	17810022	1	Bracket Protection Belt			
3	52102156	2	Bolt DIN 933 M6-16 8.8			
4	53033006	2	Washer GROWER DIN 127-6			
5	13810247	3	Grip Knob M6			
6	51030006	2	Washer DIN 125-6			

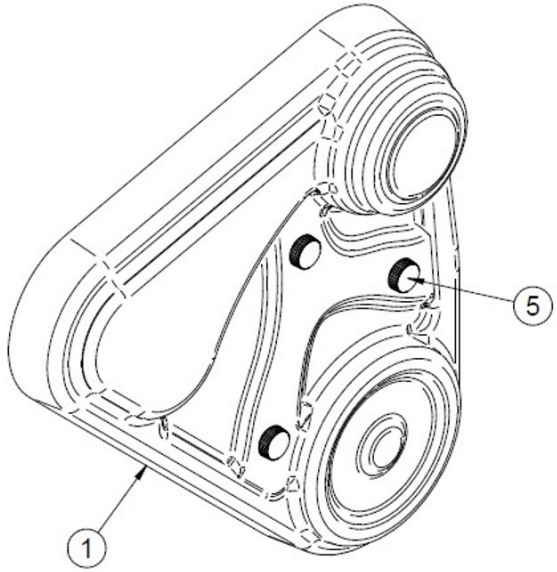

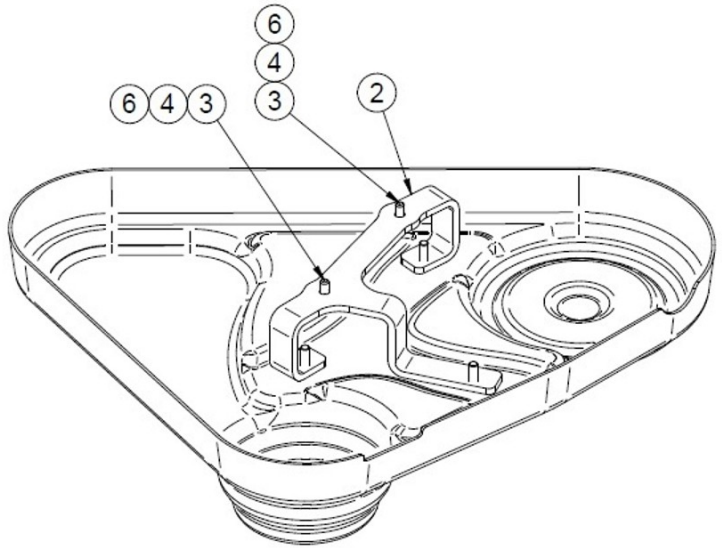

Inlet & Exhaust

D_SM56GTDN_02_1			Inlet			
Fig.	Ref.	Qty.	Descr.	Obs	From	UpTo
1	17B21066	1	Manifold,Inlet			
2	17421032	1	Gasket IN.MANIFOld			
3	17421014G.1	16	Bolt W/Washer (Generator)			
4	17B21067	1	Elbow,Air Inlet			
5	17421042	2	Gasket			
6	53038008	4	Washer DIN 6798-A 8			
7	17510015	1	Elbow Spacer			
8	52101264	4	Bolt DIN 931 M8-55 8.8			
9	54082050	2	Clamp DIN 3017 50-70/12 W4			
10	17A10031	1	Silicone Hose Reducer D60-D50			
11	54082040	5	Clamp DIN 3017 40-60/12 W4			
12	17810012	1	Air Filter			
13	17810013	1	Elbow,Frared Tube			
14	59071504	1	Clamp			
15	54082060	1	Clamp DIN 3017 60-80/12 W4			
16	17B10017	1	Air Inlet Pipe D50			
17	17B10030	1	Silicone Hose Straight Elbow			
NS	17818010	1	Termic, Bucklers			

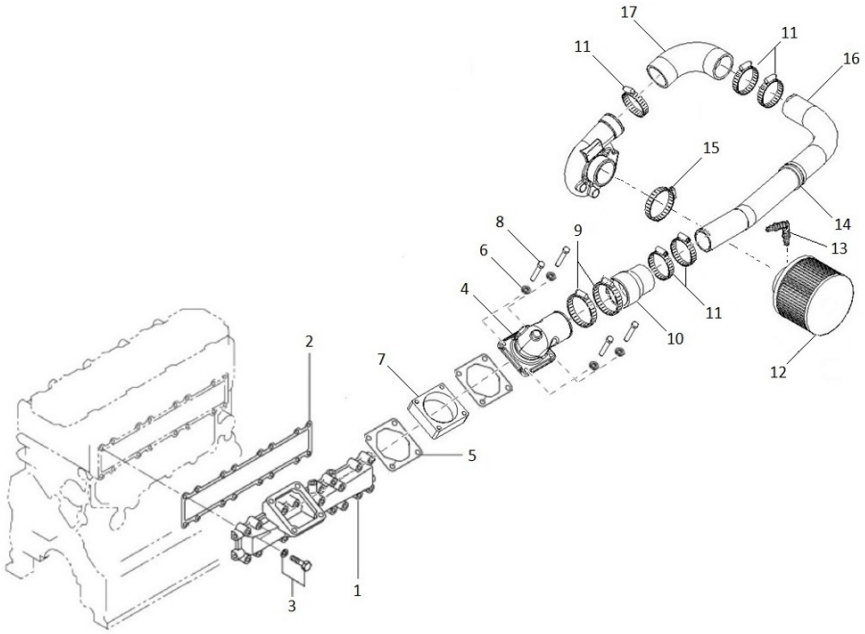

[NS] Not shown

Inlet & Exhaust

D_SM56GTDN_02_2 Turbocharger

Fig.	Ref.	Qty.	Descr.	Obs	From	UpTo
1	17B21069	1	TD04HL Turbocharger			
2	17420049	1	Gasket			
3	17B12006	1	Oil Turbocharged Pipe			
4	17828006	1	Bolt, Eye			
5	17124056	2	Gasket			
6	17712007	1	Elbow 1/8" GAS			
7	17B12005	1	Oil Turbocharged Pipe			
8	17524091	1	Gasket,Oil Pipe			
9	17B21075	2	Bolt Washer A(6X16)			
13	51125008	2	Nut Exhaust			
14	19613016	1	Turbo Stud M8-M10			
NS	17B28012	1	Turbocharger Repair, Kit			

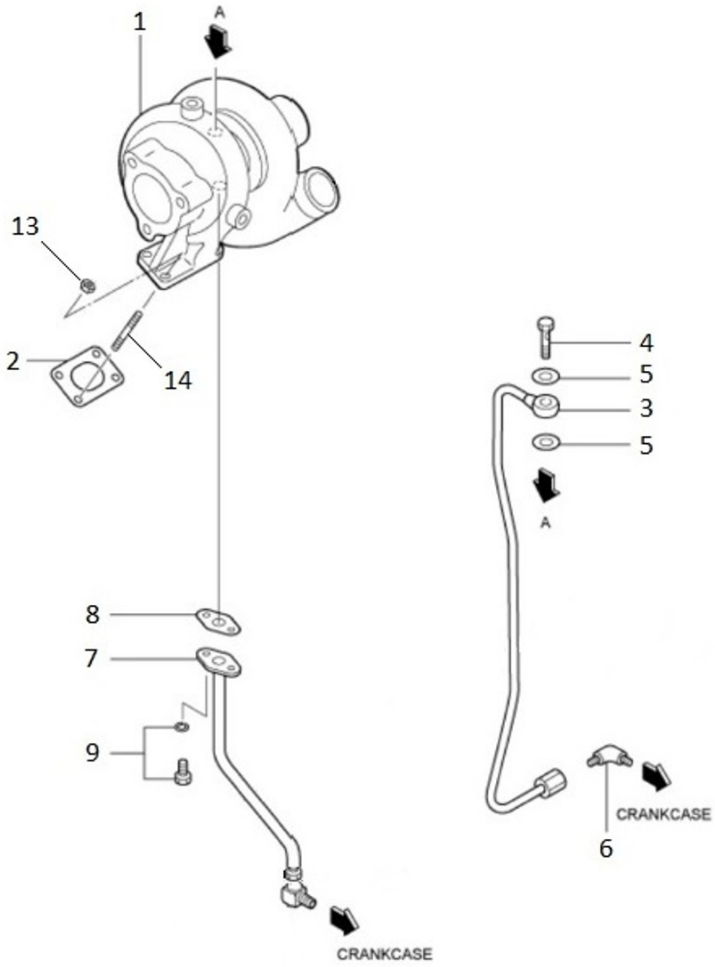

[NS] Not shown

Cooling System

D_SM56GTDN_03_1 Water Pump

Fig.	Ref.	Qty.	Descr.	Obs	From	UpTo
1	17421020G.1	1	Fresh Water Pump (tube Ø18)			
2	17421043	1	Cover,Water Pump			
3	17421022G.1	1	Gasket, Pump Cover (Generator)			
4	17421026G	1	Bolt,Flange			
5	17821026	2	Bolt, Flange			
6	17421041	1	Gasket,Side Cover			
7	17421039G.1	4	Bolt,W/Washer (Generator)			
8	17420062G.1	1	Bolt,W/Washer (Generator)			
9	17121021	1	Pulley,Water Pump			
10	17121027R	1	Thermostat			
11	17421037G.1	1	Case Assy (Generator)			
12	17421016G.1	1	Gasket(Generator)			
13	17821038	1	Bolt, Flange			
14	17821039	1	Bolt, Flange			
15	17421025G.1	1	Hose,BY-PASS (Generator)			
16	54081020	2	Clamp DIN 3017 20-32/9 W4			
17	17A17030	1	Conversion Adapter G1/4 a 5/8"SAE			
18	17A17031	1	Conversion Adapter G1/2 A 5/8 UNF			
19	17111021	1	Gasket			
20	52102259	1	Bolt DIN 933 M8-30 8.8			
21	17111020	1	Fitting,water outlet			
22	53033008	1	Washer GROWER DIN 127-8			
23	56000053	1	Washer 6-10-1,5			
24	13811035	1	Bolt,bleed			
25	52101263	1	Bolt DIN 931 M8-50 8.8			
26	53038008	1	Washer DIN 6798-A 8			
27	56000083	1	Washer 21-26-1,5			
28	60994075	1	Temperature Sensor			
29	56000073	3	Copper Washer 16-23-1,5			
30	17521028	1	Belt Type AX 45 1175			
31	60994076	1	Marine Approved Pressure Transmitters			

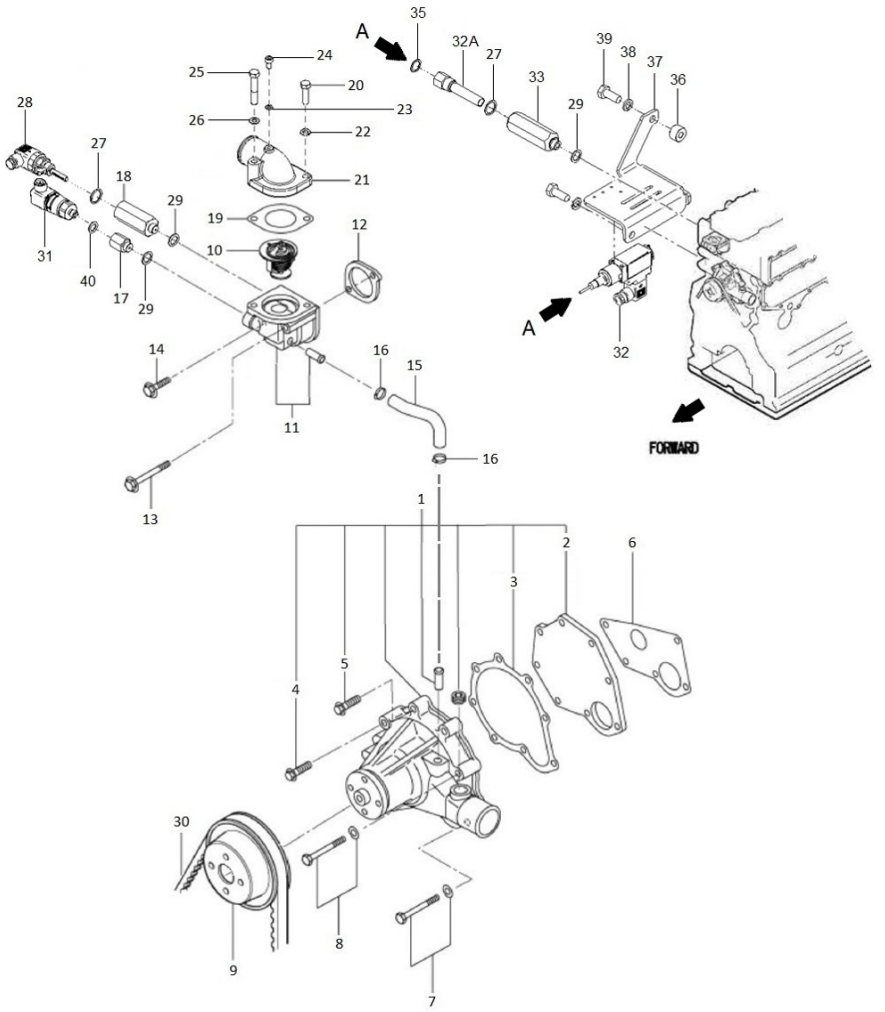

Cooling System

D_SM56GTDN_03_1 Water Pump

Fig.	Ref.	Qty.	Descr.	Obs	From	UpTo
32	6097A075	1	Thermostat DNV 95º Trafag			
32A	60994077	1	Sensor Pocket for Temperature Switch			
32B	60900956	1	10k ohm Resistor			
33	17A17033	1	Conversion Adapter 5/8 UNF			
35	56000077	1	Washer 18-23-1,5			
36	19117011	1	Spacer 10,5X19X15			
37	17A17034	1	Sensor Bracket			
38	53033012	2	Washer Grower DIN 127-12			
39	53101359	2	Bolt DIN 931 M12-30 12.9			
40	56000067	1	Washer 13-20-1,5			

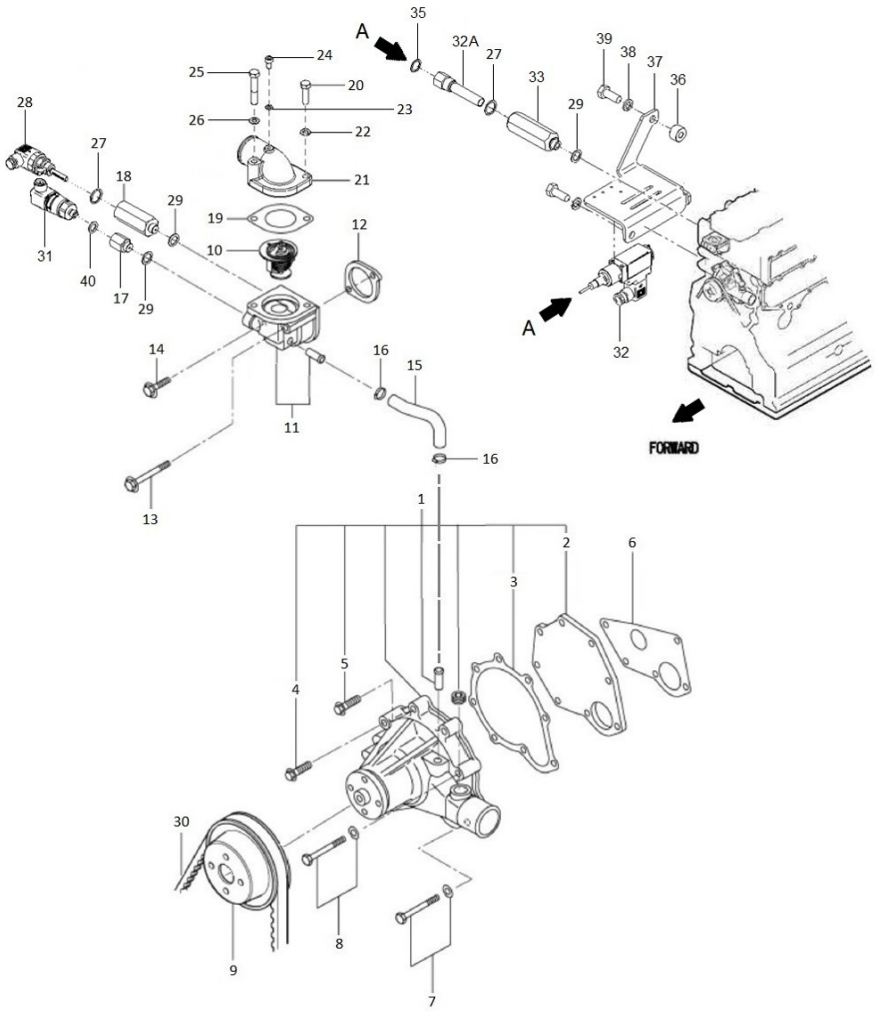

Cooling System

D_SM56GTDN_03_2 Cooler Pipes

Fig.	Ref.	Qty.	Descr.	Obs	From	UpTo
1	17811000DNVR	1	Water Cooler Assy (R)			
2	52102258	4	Bolt DIN 933 M8-25 8.8			
3	53038008	4	Washer DIN 6798-A 8			
4	14711008	4	Stud,cover			
5	17421035	1	Gasket,Exhaust Manifold			
6	51125008	4	Nut Exhaust			
7	53033008	1	Washer GROWER DIN 127-8			
8	15211053	1	Pipe 38-50-100			
9	54082032	8	Clamp DIN 3017 32-50/12 W4			
10	17111011	1	Elbow 1 1/8"			
11	15211026	1	Elbow,rubber			
12	17411024	1	Pipe,from cooler to engine D38 e2			
13	60180007	2	Outlet Coupling			
14	36511000	1	Cross Brace Pump from 74 to 616			
15	54082025	12	Clamp DIN 3017 25-40/12 W4			
16	13611038	1	Pipe 30-40-75			
17	52103156	2	Bolt DIN 912 M6-16 8.8			
18	59071324	1	Clamp RSGU 1 32/15 W1			
19	59071383	1	Clamp TYP.1 38/15 W1			
20	13811035	1	Bolt,bleed			
21	17A11014	1	Bracket			
22	17411013	1	Thermostat Water Outlet Elbow			
23	17B11011	1	Brass Pipe D32			
24	52102259	1	Bolt DIN 933 M8-30 8.8			
25	54082040	4	Clamp DIN 3017 40-60/12 W4			
26	17411035	1	Elbow Rubber			
27	14711030	1	Brass Elbow Connector			
28	17811034	1	Rubber Wet Exhaust Inlet Bend			
29	14711021	1	Elbow Nº1			
30	19411027	1	Plug			

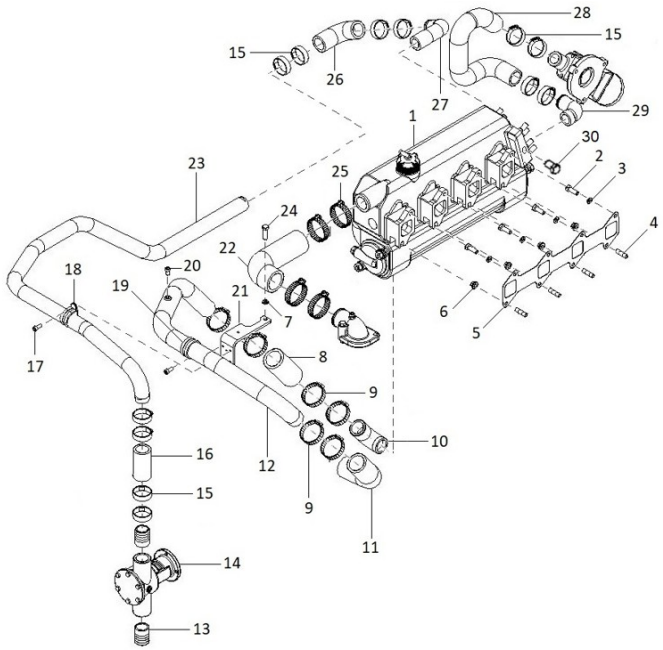

Cooling System

D_17811000DNVR Water Cooler Assy MINI-74/SM-56 TAC

Fig.	Ref.	Qty.	Descr.	Obs	From	UpTo
1	17811001DNV	1	Body, DNV Water Cooler			
2	18011004	1	Tubular Bundle			
3	18011008	2	O-Ring D. 72X3			
4	17411003	1	Water Cooler Cover			
5	16511007	8	Stud			
6	51030010	4	Washer DIN 125-10			
7	53033010	8	Washer GROWER DIN 127-10			
8	52120010	4	Nut DIN 934 M10 8.8			
9	56000205	1	Washer 10-16-3			
10	54102306	1	Bolt DIN 933 M10-16 INOX.			
11	56000073	2	Copper Washer 16-23-1,5			
12	12111076	1	Plug			
13	18011002	1	Water Cooler Cover			
14	18011031	1	Engine Anode 45 mm M.8			
15	18011009	1	Anode Plug			
16	12113092	1	Plug			
17	13811010	1	Cap			
18	17111011	1	Elbow 1 1/8"			
19	17420049	1	Gasket			
20	13311006	4	Stud,cover			
21	51125008	4	Nut Exhaust			
22	52102258	4	Bolt DIN 933 M8-25 8.8			
23	53038008	4	Washer DIN 6798-A 8			
24	55120110	4	Nut DIN 934 M10			
25	19411027	1	Plug			
NS	17811040	1	Cooler Adhesive			

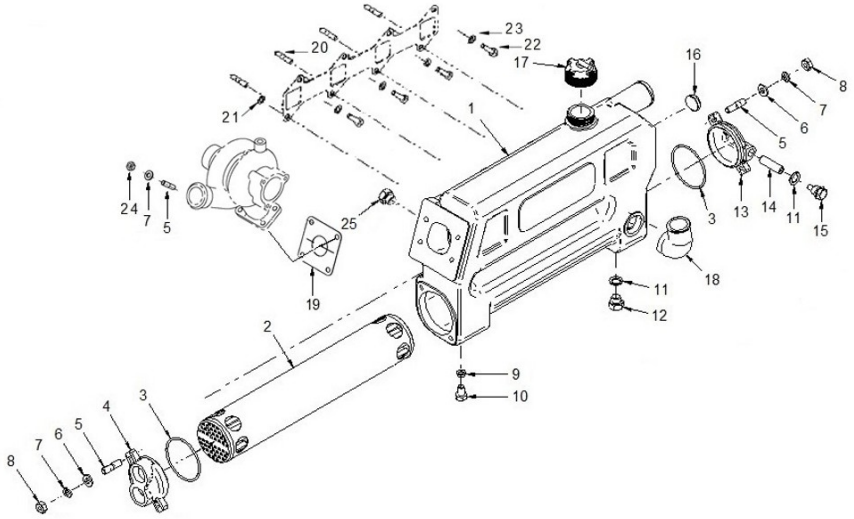

[NS] Not shown

D_SM56GTDN_03_3			Wet Exhaust			
Fig.	Ref.	Qty.	Descr.	Obs	From	UpTo
1	17421014	1	Gasket			
2	17813014	1	Adaptor			
3	53203307	3	Bolt DIN 912 M10x1,25-20 12.9			
4	17813016	1	Gasket			
5	17813015	1	Elbow,wet exhaust			
6	53033008	3	Washer GROWER DIN 127-8			
7	52103260	3	Bolt DIN 912 M8-35 8.8			

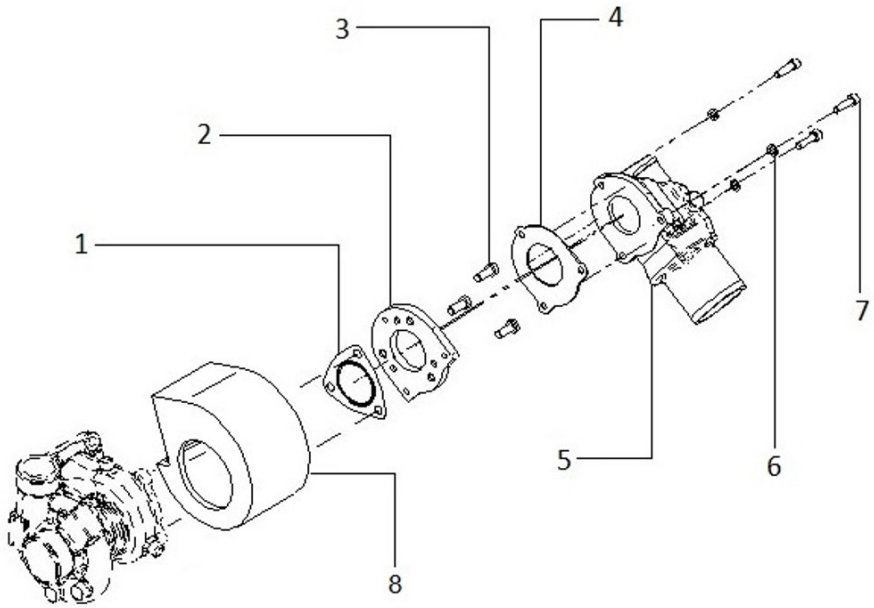

36511000			Cross Brace Pump from 74 to 616			
Fig.	Ref.	Qty.	Descr.	Obs	From	UpTo
1	34711002	1	Cover Pump			
2	34711003	1	Gasket Cover			
3	34711041	1	Impeller Plug			
4	34711008	1	1" Impeller			
5	34711005	1	Cam			
6	34711026	1	Plate,Friction			
7	54040016	1	CIRClip E-16			
8	36511018	1	Washer,seal			
9	36511019	1	Seal			
10	33311013	1	O-Ring D. 15X2			
11	36511001	1	Body,water pump			
12	36511017	1	Pin,Dowel			
13	54108154	1	Bolt DIN 84 M6-10			
14	54102154	6	Bolt DIN 933 M6-10 INOX			
15	36511010	1	Shaft,pump			
16	36511015	1	Spacer 17X24X7			
17	33311014	2	Ball Bearing 6203			
18	53040017	1	Circlip DIN 471 E-17			
19	36511020	1	Seal 16-30-7			
20	53041040	1	Circlip DIN 472 I-40			

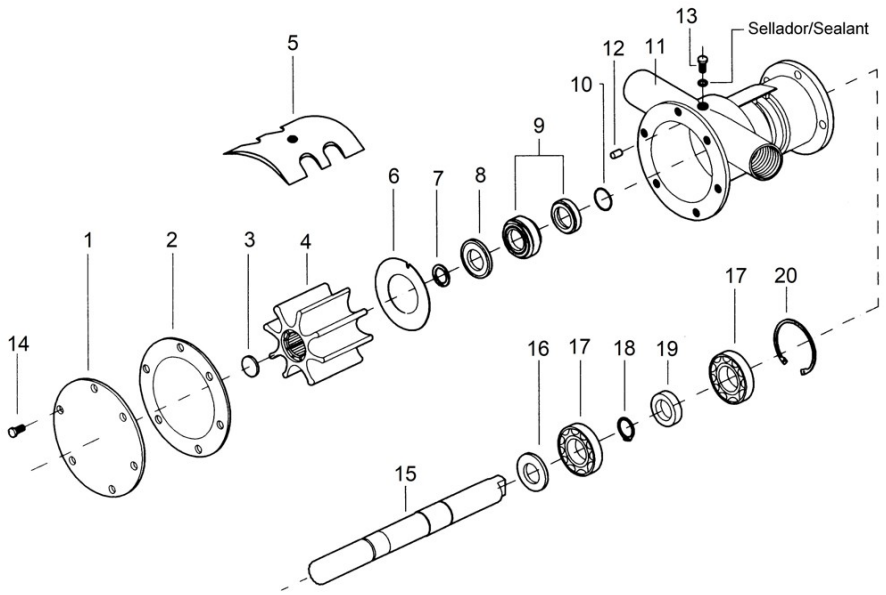

Fuel System

D_SM56GTDN_04_1 Fuel Pipe And Fuel Leak Alarm

Fig.	Ref.	Qty.	Descr.	Obs	From	UpTo
1	17024013	4	Gasket Nozzle			
2	17824013	4	Support, Nozzle			
3	17822118	4	Bolt, Flange			
4	17A14026	1	P-WV 6L Male Stud Equal Elbow Fitting			
5	17A14030	3	Steel Pipe 6mm L 80mm			
6	17A14025	3	P-TV 6L Male Stud Equal Tee Fitting			
7	17B14010	1	Pipe D6mm			
8	17B24010R	1	Double Wall Pipes Kit			
9	17B14019	1	Assy,Fuel Return			
10A	17517009.1	1	Fuel Leak Switch 12V			
	Figure A for 12V System					
10B	17517017.1	0	Fuel Leak Switch 24V	#		
	Figure b for 24V System					
11	56000086	1	Washer 22,3-29-1,5			
12	17517009.3	1	Cover, Upper			
13	17A14010	1	Return Fuel Joint			
14	17517009.4	1	Lower cover			
15	56000061	2	Washer 10-16-1,5			
16	19414028	2	P-GEV 6LR 1/8			
17	17A14029	1	1/8-28 To M10 Threat Adaptator			
18	17B14019.2	1	Fuel Leak Pipe			
19	17517009.6	1	Alarm Bracket			
20	52102157	4	Bolt DIN 933 M6-20 8.8			
21	17414009	3	Anti Vibration Mount			
22	17A25005	1	Flange, inj.pump			
23	17420047	1	O-Ring D. 140X2			
24	17520075	1	O-Ring D. 75X25			
25	17425029	4	Bolt,W/Washer			
26	17B21094	1	Pipe,Oil			
27	17424032	1	Connector			
28	17721012	1	Bolt,W/Washer			

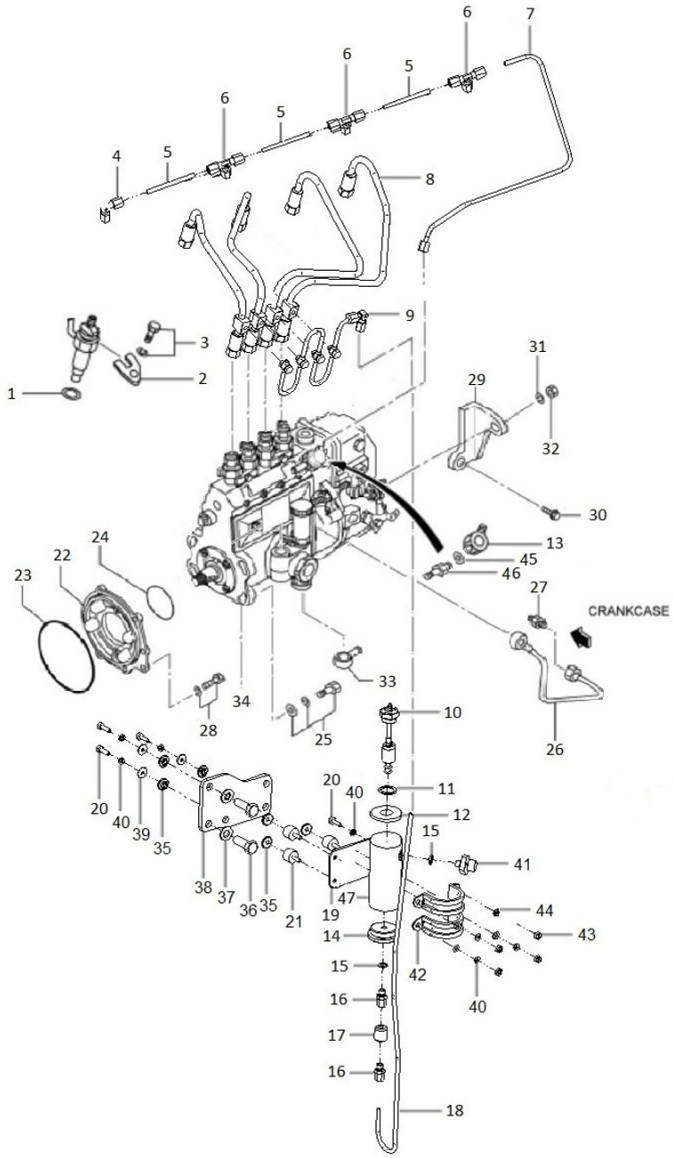

[VAR] - Variable according to repair

D_SM56GTDN_04_1			Fuel Pipe And Fuel Leak Alarm			
Fig.	Ref.	Qty.	Descr.	Obs	From	UpTo
29	17424034	1	Bracket,INJ.Pump			
30	17425036	1	Bolt,Flange			
31	13321016	1	Washer Spring			
32	17120049	1	Nut M8			
33	60530073	1	Union,COLOR (Generator)			
34	17B21095	1	Pump Assy,Inj(In-Line)			
35	17A17011	6	Bakelite Bushing			
36	52102360	2	Bolt DIN 933 M12-35 8.8			
37	51030012	2	Washer DIN 125-12			
38	17A17009	1	Fuel Leak Alarm Bracket,Earth Isolated			
39	51031006	3	Washer DIN 9021 6			
40	53033006	6	Washer GROWER DIN 127-6			
41	17B14032	1	Fitting 1/8 - 3/8 Nylon			
42	59072482	2	Clamp 2 48/20 W1			
43	52120006	4	Nut DIN 934 M6 8.8			
44	51030006	4	Washer DIN 125-6			
45	56000205	1	Washer 10-16-3			
46	17414011	1	Racord			
47	17517009.2	1	Tube			
NS	19424101	1	Spray stop kit			

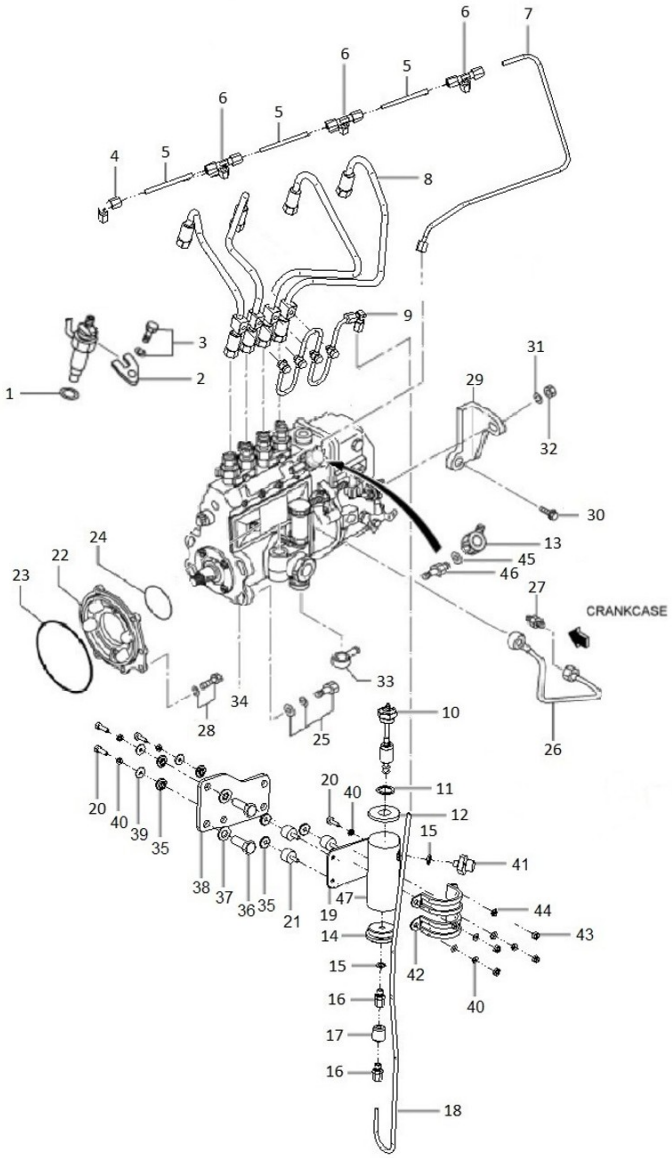

Fuel System

D_GU01_4_2 Injection Nozzle

Fig.	Ref.	Qty.	Descr.	Obs	From	UpTo
1	17A24004	4	Nozzle Assy			
2	17A26002	4	Injection Nozzle			
3	17026103	4	Pin,pressure			
4	17026104	4	Spring,pressure			
5	17A26006	4	Nut			
6	17A26003	0	Washer 1,00	#		
7	17026144	0	Washer 1,050	#		
8	17026145	0	Washer 1,100	#		
9	17026146	0	Washer 1,150	#		
10	17026010	0	Washer 1,20	#		
11	17026011	0	Washer 1,25	#		
12	17026012	0	Washer 1,30	#		
13	17026013	0	Washer 1,35	#		
14	17A26014	0	Washer 4,00	#		
15	17A26015	0	Washer 4,50	#		
16	17026016	0	Washer 1,50	#		
17	17026017	0	Washer 1,55	#		
18	17026019	0	Washer 1,60	#		
19	17026020	0	Washer 1,65	#		
20	17026021	0	Washer 1,70	#		
21	17026022	0	Washer 1,75	#		
22	17026023	0	Washer 1,80	#		
23	17026131	0	Washer 1,275	#		
24	17026132	0	Washer 1,325	#		
25	17026133	0	Washer 1,375	#		
26	17026134	0	Washer 1,425	#		
27	17026135	0	Washer 1,475	#		
28	17A26022	0	Washer 0,950	#		
29	17A26023	0	Washer 0,700	#		
30	17A26024	0	Washer 0,750	#		
31	17A26025	0	Washer 0,800	#		

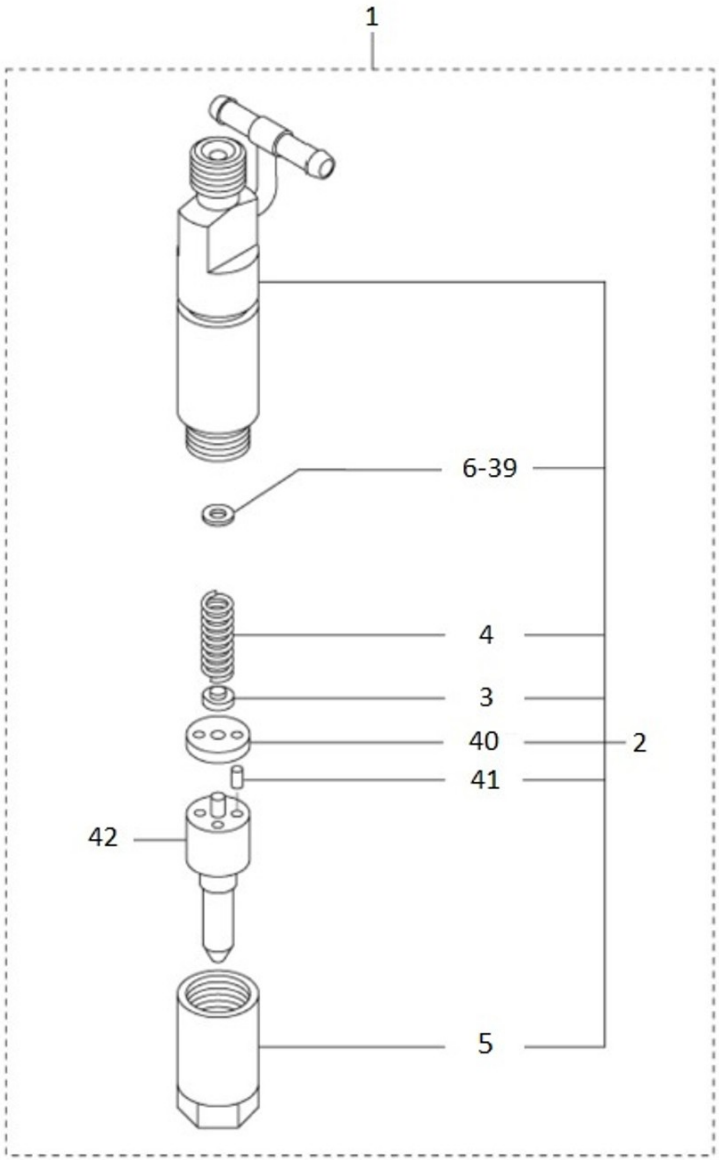

[VAR] - Variable according to repair

D_GU01_4_2 Injection Nozzle

Fig.	Ref.	Qty.	Descr.	Obs	From	UpTo
32	17A26026	0	Washer 0,850	#		
33	17A26028	0	Washer 0,975	#		
34	17B21127	0	Washer, 0.975	#		
35	17A26029	0	Washer 1,025	#		
36	17A26030	0	Washer 1,075	#		
37	17A26031	0	Washer 1,125	#		
38	17A26032	0	Washer 1,175	#		
39	17A26033	0	Washer 1,225	#		
40	17026107	4	Packing,tip			
41	17026008	8	Pin Straight			
42	17A26034	4	Nozzle Assy			

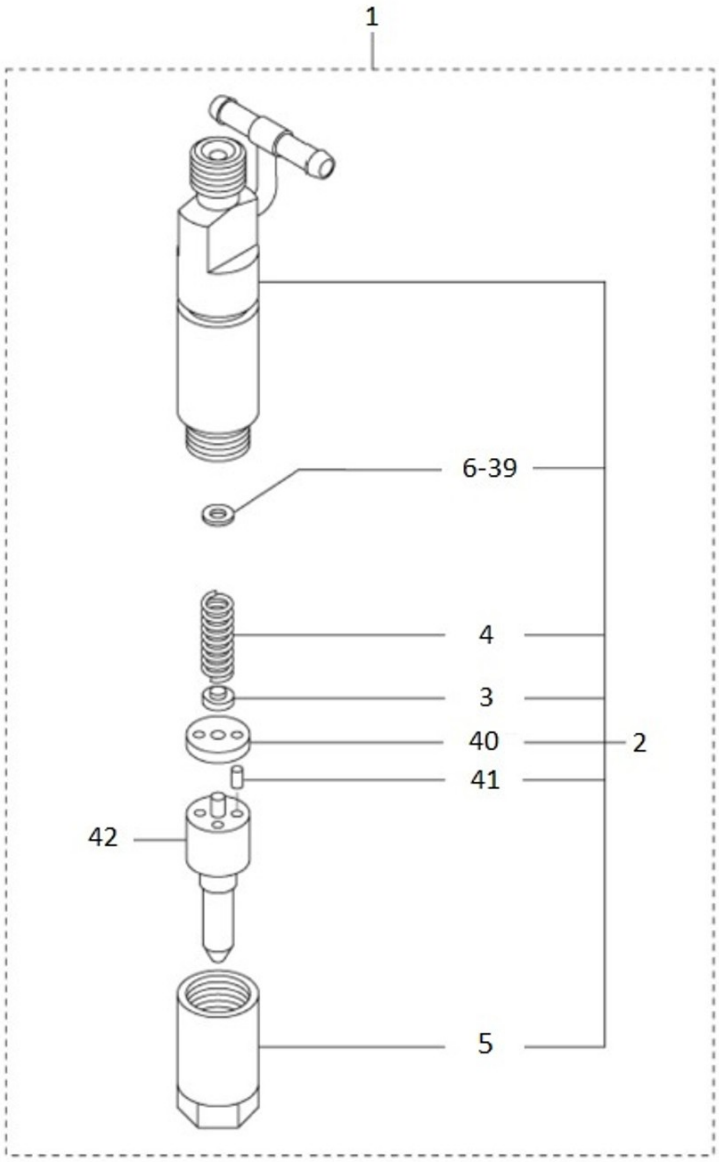

D_SM56GTDN_04_4 Governor Parts

Fig.	Ref.	Qty.	Descr.	Obs	From	UpTo
2	13324007	2	Washer Spring			
2	17223032	2	Nut			
3	17427005G	1	Bracket			
4	17427006G	1	ROD,Support			
5	17B21135	1	Solenoid Assy,ETR			
7A	17B21136	1	Solenoid(12V)			
	Figure A for 12V System					
7B	17425264.2	1	Solenoid 24V			
	Figure b for 24V System					
7C	60972516	1	G.A.C 175 Series 12V Integrated Actuator			
	Figure C for Parallel System 12V					
7D	60972520	1	G.A.C. 175 Series 24V Integrated Actuat.			
	Figure D for Parallel System 24V					
8	17B21137	3	Bolt Washer Assy			
9B	60972518	1	Assembly kit for 175 series actuator			
	Figure b for Parallel System					

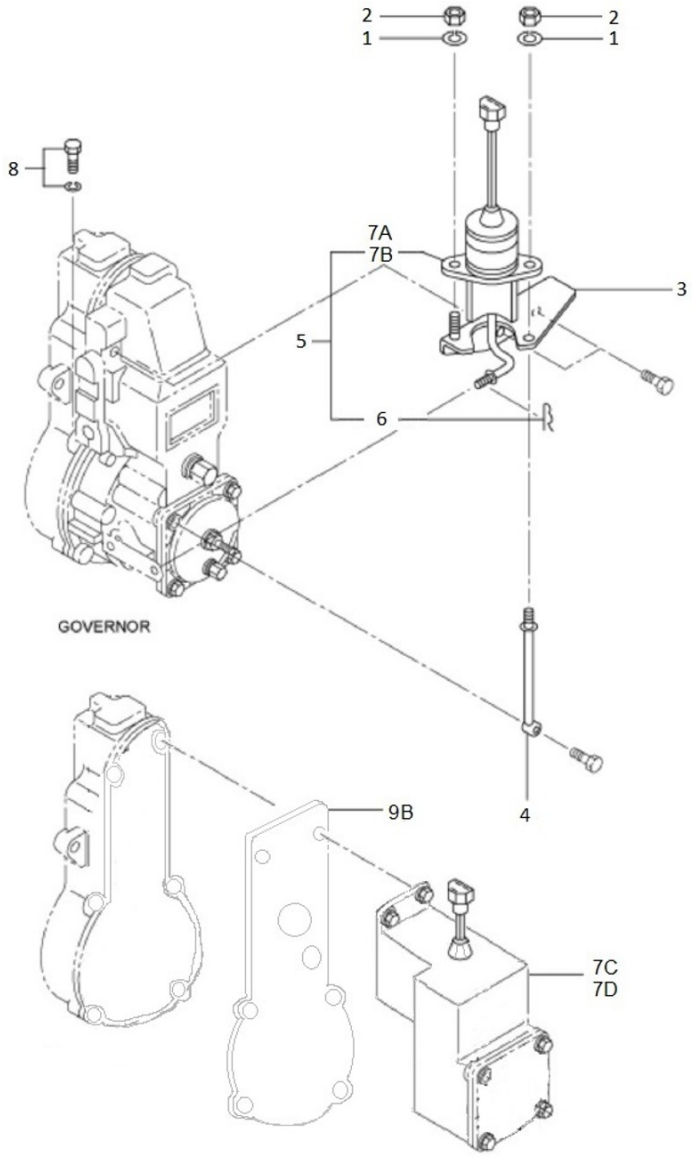

Fuel System

D_SM56GTDN_04_5 Fuel Supply Parts

Fig.	Ref.	Qty.	Descr.	Obs	From	UpTo
1	17414003	1	Bracket 2nd Filter			
2	19117014	2	Spacer 10,5X20X20			
3	53033008	2	Washer GROWER DIN 127-8			
4	52101261	2	Bolt DIN 931 M8-40 8.8			
5	52120010	2	Nut DIN 934 M10 8.8			
6	53033010	2	Washer GROWER DIN 127-10			
7	19424022	2	Fuel Filter Element SDZ-165/205/280			
8	17414002	1	Bracket			
9	51030010	2	Washer DIN 125-10			
10	52101311	2	Bolt DIN 931 M10-40 8.8			
11	57000378	4	Washer 18-24-1,5			
12	19414039	2	Racor Fitting Male M18x150-M20x150			
13	17A14004	1	Fuel Hose DNV			
14	17A14005	1	Fuel Hose DNV			
15	56000069	4	Washer 14-20-1,5			
16	19414024	2	Fitting Adapter Male 3/8" to M14x1.5			

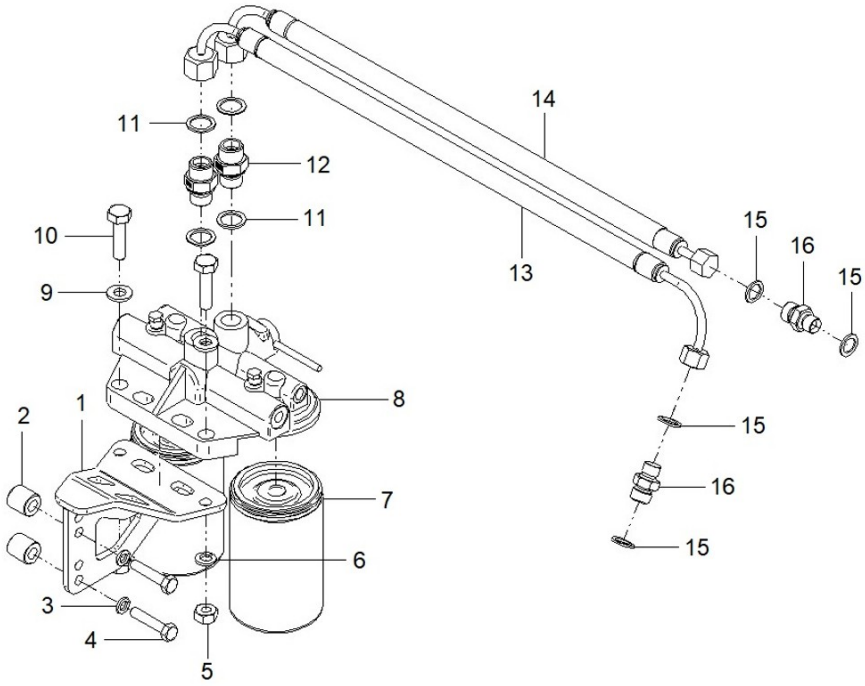

Electrical System

D_SM56GTDN_05_1 Electrical System 12V

Fig.	Ref.	Qty.	Descr.	Obs	From	UpTo
1	17427018	1	Plate Glow Plug			
2	17827017	4	Plug, Glow			
3	17527005	2	Relay 12V 200A			
4	6097B206	1	Elect. Inst. G. SM-56 DNV			
5A	17B21136	1	Solenoid(12V)			
	Figure A for Standard System					
5B	60972516	1	G.A.C 175 Series 12V Integrated Actuator			
	Figure b for Parallel System					
6	60900313	1	Cable Gland Captor-2000 PG29			
7	60900314	1	Hexagonal Locknut Captor-2000 PG29			
8	6097A004	1	Back Part Metal Box			
9	17B17001	1	Relays Box Bracket			
10	19017113	1	Relay 12V Earth Isolated Nagares			
11	6097A002.03	1	Relay Bracket			
12	58101155	4	Bolt DIN 933 M6-12 Nylon			
13	51030006	7	Washer DIN 125-6			
14	52102154	2	Bolt DIN 933 M6-10 8.8			
15	54105157	2	Bolt DIN 7991 M6-20 INOX.			
16	52102256	6	Bolt DIN 933 M8-16 8.8			
17	6097A005	1	Metal Box Cover			
18	52102308	1	Bolt DIN 933 M10-25 8.8			
22	52103156	1	Bolt DIN 912 M6-16 8.8			
23	52102106	1	Bolt DIN 933 M5-15 8.8			
24	51030005	1	Washer DIN 125-5			
25	53033006	2	Washer GROWER DIN 127-6			
26	52120005	5	Nut DIN 934 M5 8.8			
27	52120006	5	Nut DIN 934 M6 8.8			
28	52102104	4	Bolt DIN 933 M5-10 8.8			
29	17827001	1	Starter Assy			
30	17427011G	1	Alternator 12V/50A			
31	17427002G.1	1	Alternator Bracket, Earth Isolated			

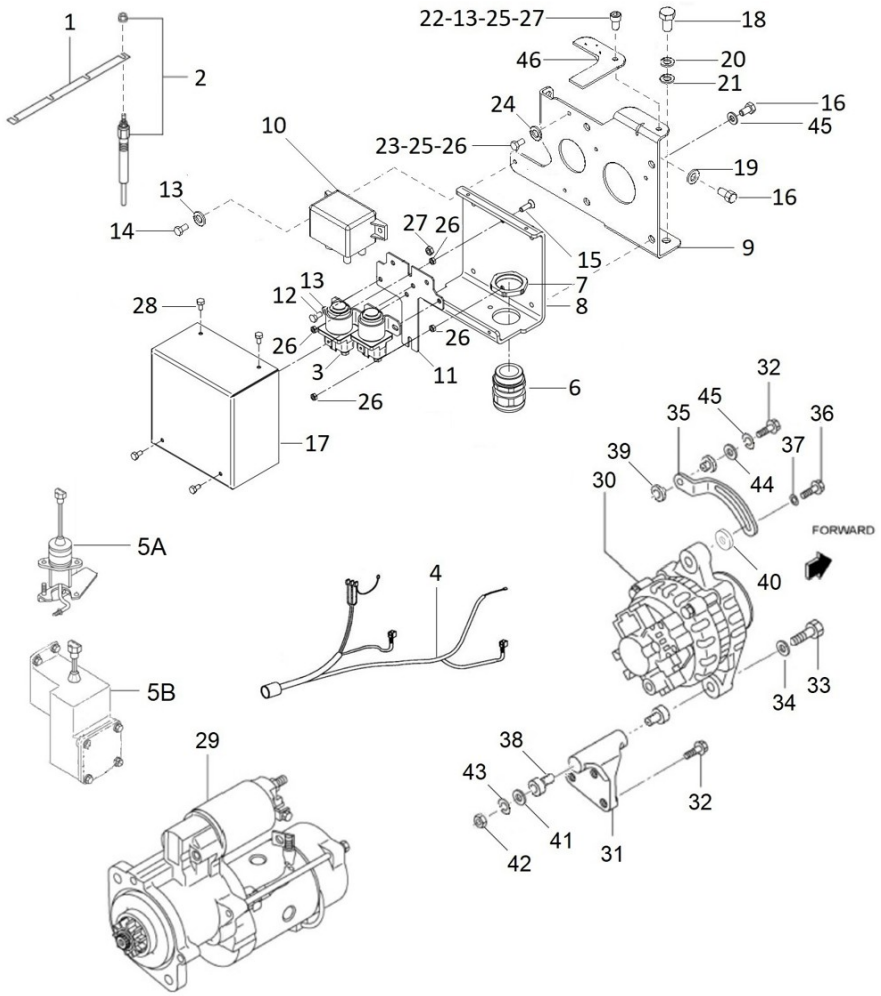

Electrical System

D_SM56GTDN_05_1			Electrical System 12V			
Fig.	Ref.	Qty.	Descr.	Obs	From	UpTo
32	52102258	1	Bolt DIN 933 M8-25 8.8			
33	52101324	1	Bolt DIN 931 M10-110 8.8			
34	53038010	1	Washer DIN 6798-A 10			
35	17427007G.2	1	Plate, Adjusting Generator - 2-PoleS			
36	52102259	1	Bolt DIN 933 M8-30 8.8			
37	51031008	1	Washer DIN 9021 8			
38	17117011	2	Bracket Bakelite Bushing			
39	17117012	2	Tensor Bakelite Bushing			
40	17217015	1	Spacer 8,5X22X3,5			
41	51030010	1	Washer DIN 125-10			
42	52120010	1	Nut DIN 934 M10 8.8			
43	53033010	2	Washer GROWER DIN 127-10			
44	51030008	4	Washer DIN 125-8			
45	53033008	10	Washer GROWER DIN 127-8			
46	17B10018	1	Pipe Bracket			

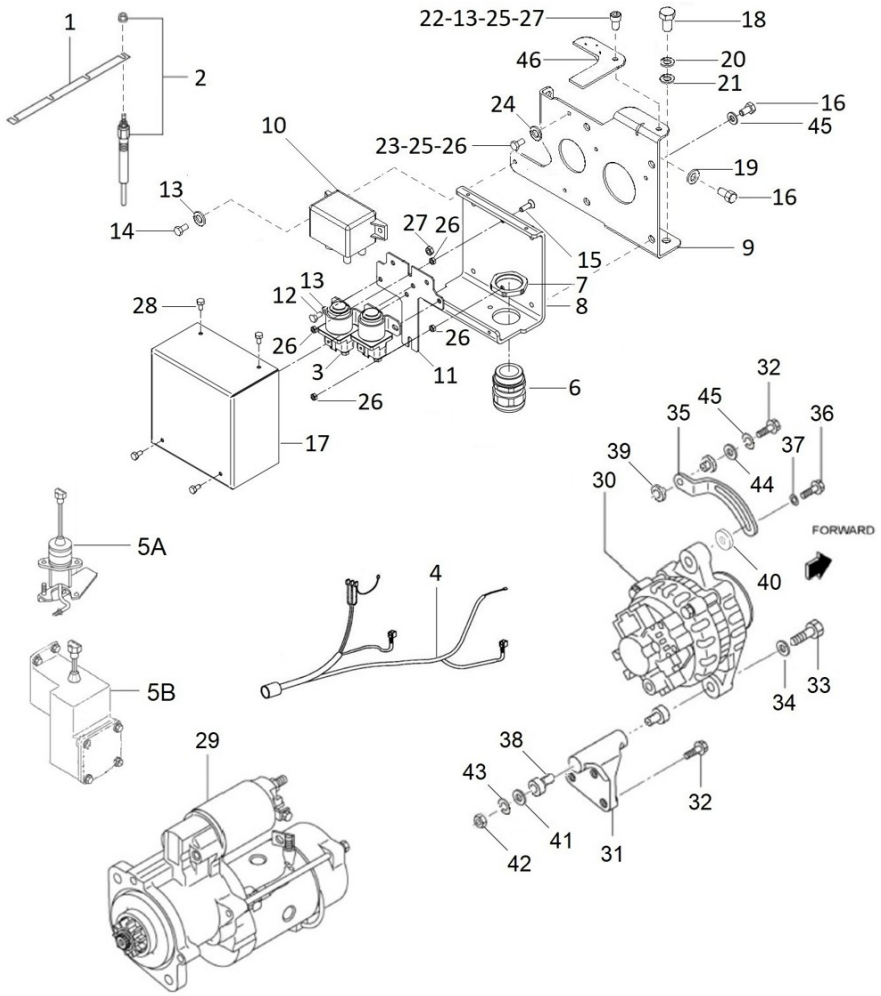

Electrical System

D_SM56GTDN_05_2 Electrical System 24V

Fig.	Ref.	Qty.	Descr.	Obs	From	UpTo
1	17427018	1	Plate Glow Plug			
2	17A27017	4	Glow Plug 24V			
3	17417005	2	Relay 24V 24-100			
4	6097B206	1	Elect. Inst. G. SM-56 DNV			
5A	17425264.2	1	Solenoid 24V			
	Figure A for Standard System					
5B	60972520	1	G.A.C. 175 Series 24V Integrated Actuat.			
	Figure b for Parallel System					
6	60900313	1	Cable Gland Captor-2000 PG29			
7	60900314	1	Hexagonal Locknut Captor-2000 PG29			
8	6097A004	1	Back Part Metal Box			
9	17B17001	1	Relays Box Bracket			
10	19017114	1	Relay 24V Earth Isolated Nagares			
11	6097A002.03	1	Relay Bracket			
12	58101155	4	Bolt DIN 933 M6-12 Nylon			
13	51030006	7	Washer DIN 125-6			
14	52102154	2	Bolt DIN 933 M6-10 8.8			
15	54105157	2	Bolt DIN 7991 M6-20 INOX.			
16	52102256	6	Bolt DIN 933 M8-16 8.8			
17	6097A005	1	Metal Box Cover			
18	52102308	1	Bolt DIN 933 M10-25 8.8			
22	52103156	1	Bolt DIN 912 M6-16 8.8			
23	52102106	1	Bolt DIN 933 M5-15 8.8			
24	51030005	1	Washer DIN 125-5			
25	53033006	2	Washer GROWER DIN 127-6			
26	52120005	5	Nut DIN 934 M5 8.8			
27	52120006	1	Nut DIN 934 M6 8.8			
28	52102104	4	Bolt DIN 933 M5-10 8.8			
29	17527001.2	1	Starter Assy 24V			
30	17417024	1	Alternator 28V/55A			
31	17427002.5	1	Alternator Bracket, Earth Isolated			

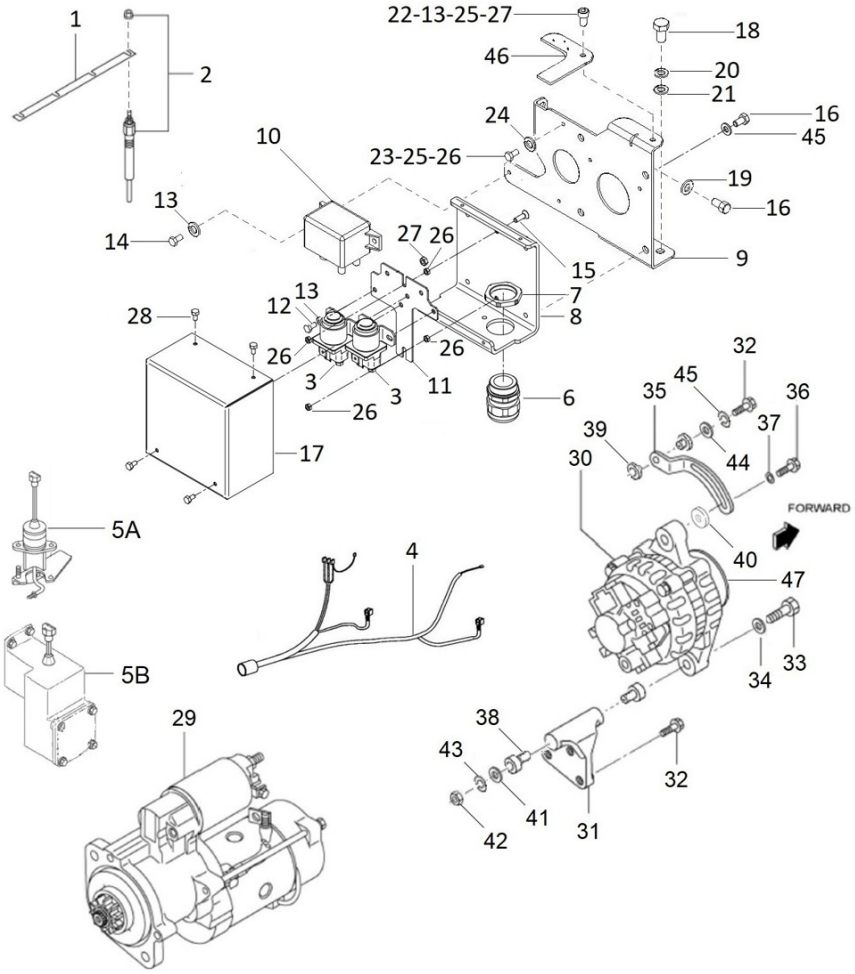

Electrical System

D_SM56GTDN_05_2			Electrical System 24V			
Fig.	Ref.	Qty.	Descr.	Obs	From	UpTo
32	52102258	1	Bolt DIN 933 M8-25 8.8			
33	52101324	1	Bolt DIN 931 M10-110 8.8			
34	53038010	1	Washer DIN 6798-A 10			
35	17427007.1	1	Plate,Adjusting			
36	52102259	1	Bolt DIN 933 M8-30 8.8			
37	51031008	1	Washer DIN 9021 8			
38	17117011	2	Bracket Bakelite Bushing			
39	17117012	2	Tensor Bakelite Bushing			
40	17217015	1	Spacer 8,5X22X3,5			
41	51030010	1	Washer DIN 125-10			
42	52120010	1	Nut DIN 934 M10 8.8			
43	53033010	2	Washer GROWER DIN 127-10			
44	51030008	4	Washer DIN 125-8			
45	53033008	10	Washer GROWER DIN 127-8			
46	17B10018	1	Pipe Bracket			
47	17417022	1	Pulley			
NS	13527018	1	Connector Assy 2-			
NS	13827003	2	Connector			

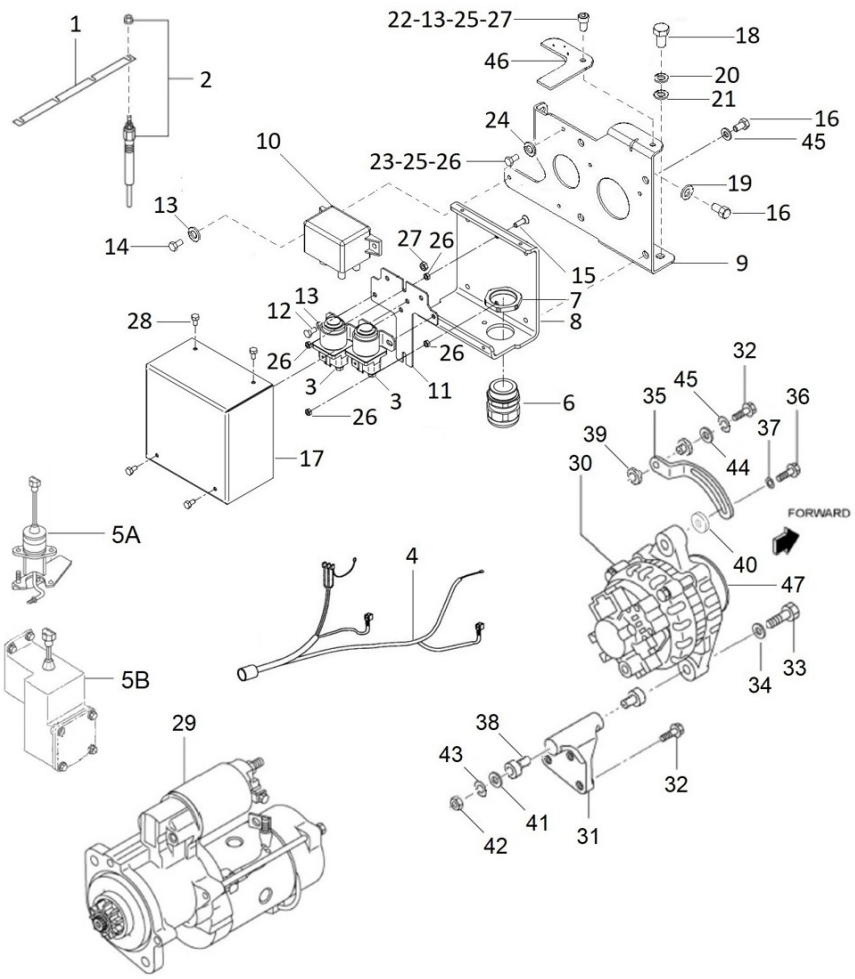

[NS] Not shown

Electrical System

D_6097B501 Parallel control system 12V

Fig.	Ref.	Qty.	Descr.	Obs	From	UpTo
1	60972521	1	Speed Control Unit G.A.C. ESD-5500 Ser.			
2	17317007	1	Electronic Unit Bracket			
3	17A14009	4	Anti Vibration Mount M6			
4	51030006	8	Washer DIN 125-6			
5	53033006	8	Washer GROWER DIN 127-6			
6	52120006	4	Nut DIN 934 M6 8.8			
10	17317008	1	Parallel electronic unit cover			
11	52102154	2	Bolt DIN 933 M6-10 8.8			
12	60900310	1	Connector Press CAPTOR-2000 M32 RAL7001			
13	60900311	1	Screw Connector Press Captor-2000 M32			
14	63900028	1	Relay 12V 20/30A NO+NC			
15	51058054	1	Aluminium Rivet 4.0 X 10			
16	60573041.25G	1	Connector Adapter Parallel			
NS	60972517	1	Connector for actuator Packard type	[NS]		
NS	60974223DNV	1	Auxiliary Installation Parallel TAC Genset	[NS]		

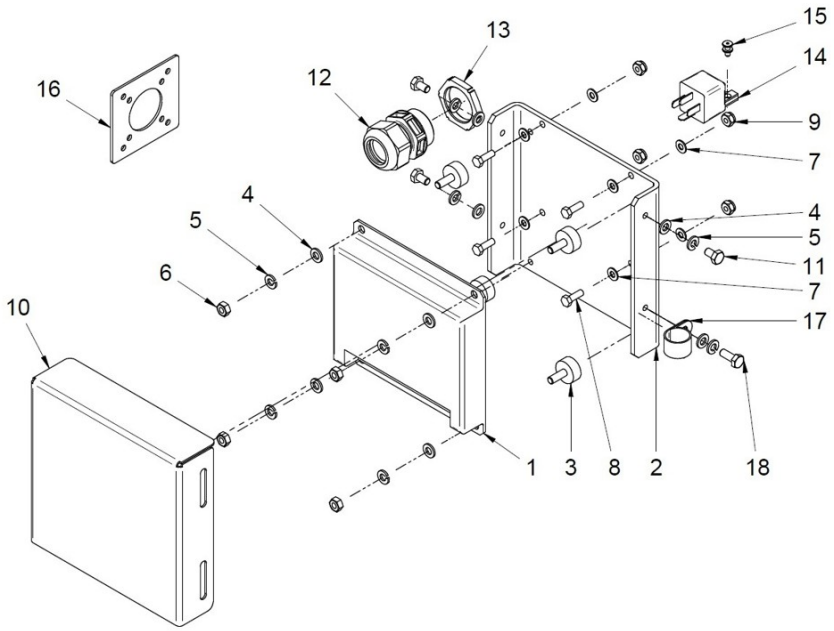

[NS] Not shown

Electrical System

D_6097B502 Parallel control system 24V

Fig.	Ref.	Qty.	Descr.	Obs	From	UpTo
1	60972521	1	Speed Control Unit G.A.C. ESD-5500 Ser.			
2	17317007	1	Electronic Unit Bracket			
3	17A14009	4	Anti Vibration Mount M6			
4	51030006	8	Washer DIN 125-6			
5	53033006	8	Washer GROWER DIN 127-6			
6	52120006	4	Nut DIN 934 M6 8.8			
10	17317008	1	Parallel electronic unit cover			
11	52102154	3	Bolt DIN 933 M6-10 8.8			
12	60900310	1	Connector Press CAPTOR-2000 M32 RAL7001			
13	60900311	1	Screw Connector Press Captor-2000 M32			
14	17417005.1	1	Relay 24V 24-22A			
15	51058054	1	Aluminium Rivet 4.0 X 10			
16	60573041.25G	1	Connector Adapter Parallel			
17	59071224	1	Clamp RSGU 1 22/15 W1			15/11/2023
17	59071324	1	Clamp RSGU 1 32/15 W1		15/11/2023	
18	52102156	1	Bolt DIN 933 M6-16 8.8			
NS	60972517	1	Connector for actuator Packard type			
NS	60974223DNV	1	Auxiliary Installation Parallel TAC Genset			

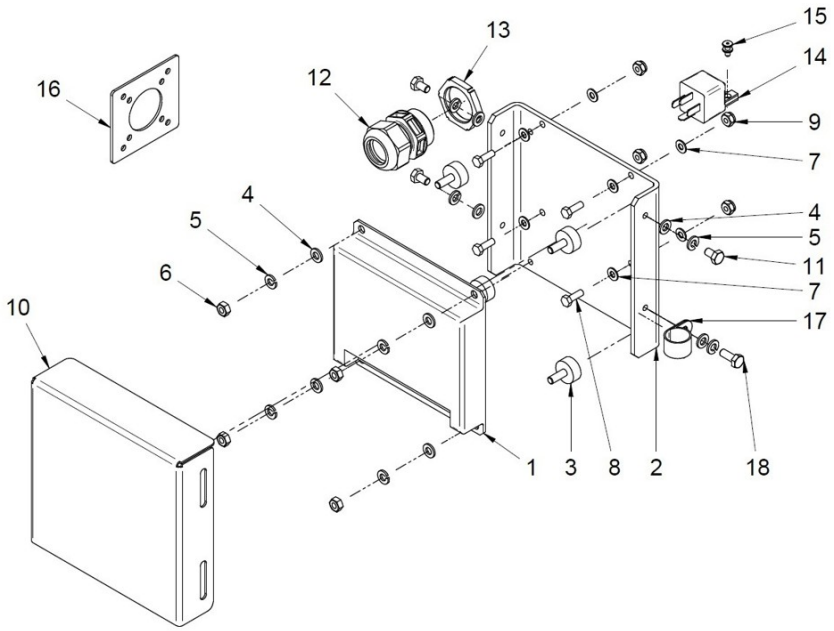

[NS] Not shown

Electrical System

D_SM56GTDN_05_5 Control Cabinets

Fig.	Ref.	Qty.	Descr.	Obs	From	UpTo
1A	6097A215	1	Box CO 40 17/25/35/45/50/68 GT TAC 12V			
1B	6097A220	1	Box CO 40 17/25/35/45/50/68 GT TAC 24V			
2A	60971738	1	Parallel Kit 45 GT 400/230V TAC Control and Power 12			
2B	6097B737	1	Parallel Kit 45 GT 400/230V TAC Control and Power 24			
2C	60971735	1	Parallel Kit 45 GT 230V TAC Control and Power 24V			
2D	60971736	1	Parallel Kit 45 GT 230V TAC Control and Power 12V			

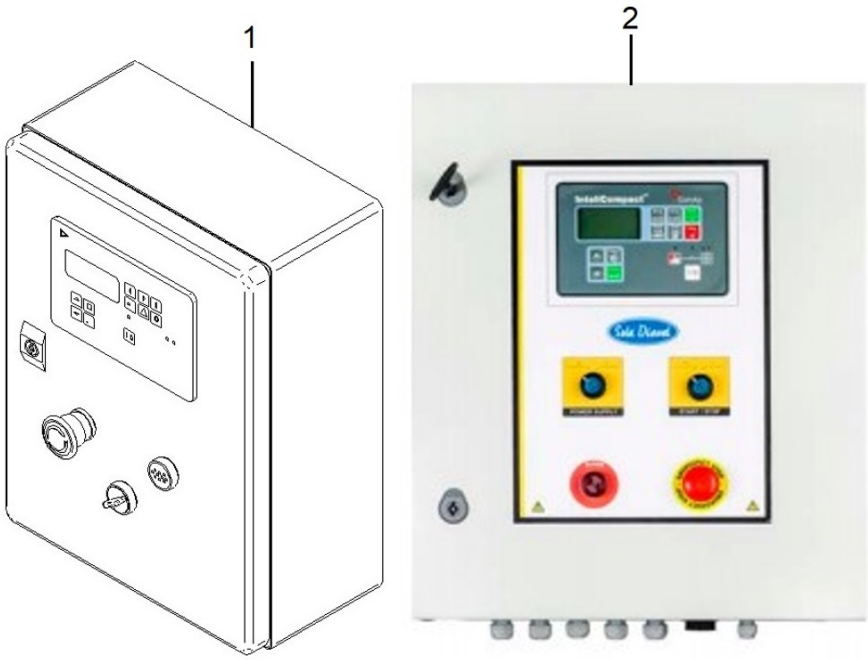

D_1138T			Genset Extension TAC			
Fig.	Ref.	Qty.	Descr.	Obs	From	UpTo
1A	6097A216	1	Wiring Extension Genset TAC 6 M.			
1B	6097A218	1	Wiring Extension TAC Genset 12 M. CPC 37 V.			
1C	60974552	1	3-way Wiring Wxtension for Auxiliary Kits 4 m			
1D	60900165	1	3-way Wiring Extension for Auxiliary Kits 6 m			
1F	60900166	1	3-way Wiring Extension for Auxiliary Kits 12 m			
1G	60900167	1	3-way Wiring Extension for Auxiliary Kits 24 m			
1H	60972104	1	Double Panel SCO 12 M. Harness			
1I	60972105	1	Double Panel SCO 24 M. Harness			
1J	60972110	1	Double Panel SCO 36 M. Harness			
1K	60974227.12	1	AVR External Control Cable 12m.			
1L	60974228.12	1	ECU External Control Cable 12m.			
1M	60974227.24	1	AVR External Control Cable 24m.			
1N	60974228.24	1	ECU External Control Cable 24m.			

Genset Alternator Spare Parts

D_SM56GTDN_06_1			Alternator 45 GT/GTC and 54 GTA/GTAC			
Fig.	Ref.	Qty.	Descr.	Obs	From	UpTo
1A	605113050ZI4RS	1	Alt.MECC.ALTE III 50KVA 1500 400/230(RS)			
1B	605113050ZI4RC	1	Alt.MECC.ALTE III 50KVA 1500 400/230(RC)			
1C	605113050ZI5RS	1	Al.MECC.ALTE III 50KVA 1500 230V (RS)			
1D	605113050ZI5RC	1	Al.MECC.ALTE III 50KVA 1500 230V (RC)			
1E	605123060ZI2RS	1	Al.MECC.ALTE III 60KVA 1800 480/277 (RS)			
1F	605123060ZI2RC	1	Al.MECC.ALTE III 60KVA 1800 480/277 (RC)			
1G	605123060ZI3RS	1	Al.MECC.ALTE III 60KVA 1800 240V (RS)			
1H	605123060ZI3RC	1	Al.MECC.ALTE III 60KVA 1800 240V (RC)			

Genset Alternator Spare Parts

D_605113050ZI6 Alternator Spare Parts TYPE C From 30/12/2021

Fig.	Ref.	Qty.	Descr.	Obs	From	UpTo
1	605113050ZI6.1	1	Drive End Bracket			
2	605113050ZI6.2	1	Protection Screen			
3	605113050ZI6.3	1	Frame and Stator			
4	605113050ZI6.4	1	Cable Grommet diam. 70 mm			
5	605113050ZI6.13	1	Kit Terminal Board 7			
6	605113050Z4.4	1	Exciter Stator H-45 6P			
7	605113050ZI6.6	1	Exciter Stay Bolt H-45			
8	605113050ZI6.7	1	Cover Stay Bolt			
9	605113075ZI2.3	1	Non Drive end Bracket			
10	605113050ZI6.9	1	Rear Seal			
11	605113050Z4.23	1	Disc Bloking Ring-Spacer			
12	605113050ZI6.10	1	Disc SAE 11,5			
13	605113050Z4.19	1	Ring Spacer Vol. 8 - 10			
14	605113050Z4.21	1	Kit Coupling Disc Plates SAE 11,5			
15	605113050Z4.17	1	Plastic Fan			
16	605113050Z4.16	1	Clamp			
17	605113050ZI6.11	1	Rotor Assy			
18	605113050ZI6.12	1	Exciter Armature H-45 6P (+ Diodes T30)			
19	605113050Z4.13	1	Rear Bearing 6309-2RS C3			
21	M9909505310	1	Regulator Cap			
22	60500023.1	1	Electronic Regulator DSR			
23	M7510603373	1	Terminal Box			
24	M9903910114	1	Terminal Box Lid			
25	605113050Z4.12	1	Cable Grommet			
26	19620078	1	Rubber Profile EPDM 0,54m			
50	60511386P	1	PD500 Parallel Device			
51	60511387P	1	PD-I Parallel Device			

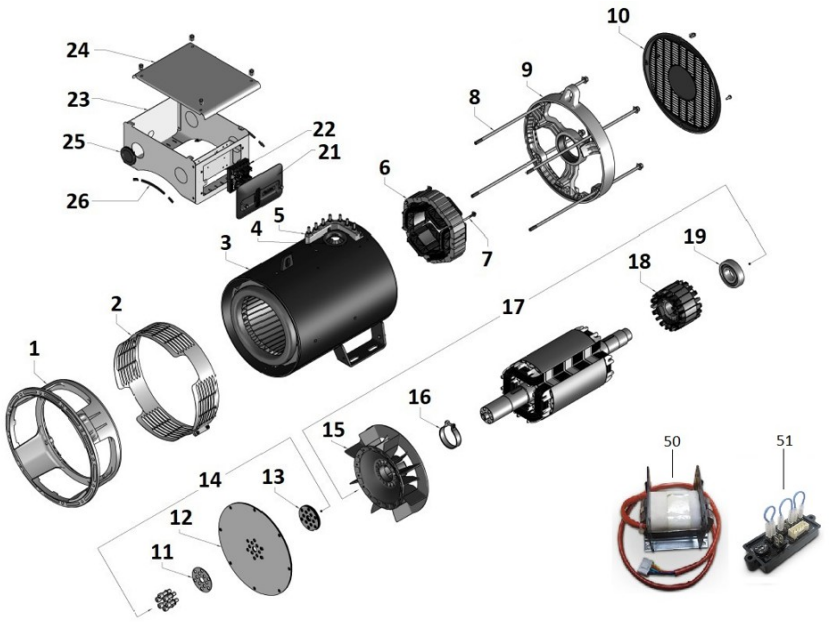

Genset Alternator Spare Parts

D_605113050Z4 Spare Part List Alternator Type B Upto 29/12/2021

Fig.	Ref.	Qty.	Descr.	Obs	From	UpTo
1	605113050Z4.1	1	Rear Seal			
2	605113050Z4.2	1	Non Drive End Bracket			
3	605113050Z4.3	2	Exciter Stay Bolt H-45 (S, M)			
4	605113050Z4.4	1	Exciter Stator H-45 6P			
5	605113050Z4.5	1	Frame and Stator 1M			
6	605113050Z4.6	1	Terminal Board 8 pin			
7	605113050Z4.7	1	Cable Grommet			
8	605113050Z4.8	2	PVC Rubber Profile			
9	605113050Z4.9	1	Terminal Box (Not Painted)			
10	60500023.1	1	Electronic Regulator DSR			
11	605113050Z4.10	1	Terminal Box Lid (Not Painted)			
12	605113050Z4.11	1	Regulator Holding Panel (Not Bainted)			
13	605113050Z4.12	1	Cable Grommet			
14	605113050Z4.13	1	Rear Bearing 6309-2RS C3			
15	605113050Z4.14	1	Exciter Armature H-45 6P			
16	605113050Z4.15	1	Rotor Assy 1M, MD35			
17	605113050Z4.16	1	Clamp			
18	605113050Z4.17	1	Plastic Fan			
19	605113050Z4.18	1	Cover Stay Bolt 32 M			
20	605113050Z4.19	1	Ring Spacer Vol. 8 - 10			
21	605113050Z4.20	1	Drive end bracket MD35/3			
22	605113050Z4.21	1	Kit Coupling Disc Plates SAE 11,5			
23	605113050Z4.22	1	Protection Screen MD35			
24	605113050Z4.23	1	Disc Bloking Ring-Spacer			
50	60511386P	1	PD500 Parallel Device			
51	60511387P	1	PD-I Parallel Device			
NS	605113050Z4.24	1	Kit Terminal Box Painted (2+20+75b+98+17			
NS	605113050Z4.25	1	Kit USB2DxR			
NS	60511320.1.11	1	Diode			

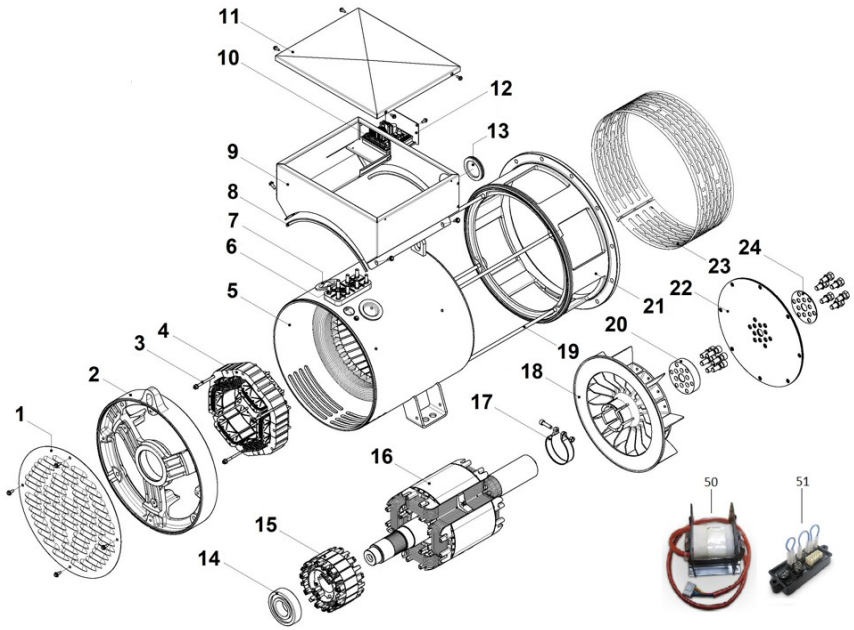

[NS] Not shown

Genset Alternator Kit

D_6057B106			Alternator Kit Without Canopy			
Fig.	Ref.	Qty.	Descr.	Obs	From	UpTo
1	52102361	2	Bolt DIN 933 M12-40 8.8			
2	53033012	18	Washer Grower DIN 127-12			
3	51030012	18	Washer DIN 125-12			
4	17410001G	2	Support ANTERIUER			
5	52102359	8	Bolt DIN 933 M12-30 8.8			
6	52102358	8	Bolt DIN 933 M12-25 8.8			
7	52120012	8	Nut DIN 934 M12 8.8			
8	61674002	2	Engine Mount Type F 35 SHA M12 H 41			
8	61674005	2	Engine Mount Type F BRB 110 B50 SHA M12 H 41		14/04/2023	
9	53033010	20	Washer GROWER DIN 127-10			
10	52103308	12	Bolt DIN 912 M10-25 8.8			
11	60900310	3	Connector Press CAPTOR-2000 M32 RAL7001			
12	52102461	2	Bolt DIN 933 M16-40 8.8			
13	53033016C	2	Washer			
14	51030016	2	Washer DIN 125-16			
15	52102308	8	Bolt DIN 933 M10-25 8.8			
16	61674001	2	Engine Mount Type F 40 SHA M16 H 41			
16	61674004	2	Engine Mount Type F BRB 110 B50 SHA M16 H 41		14/04/2023	
17	60539019	4	LID (60 Tube)			
18	60574055.01	1	Genset Chassis			
19	60900311	3	Screw Connector Press Captor-2000 M32			
NS	19414022	1	Spacer 13X25X10	[NS]		
NS	58088282	4	Pastic Cable Zip Tie	[NS]		

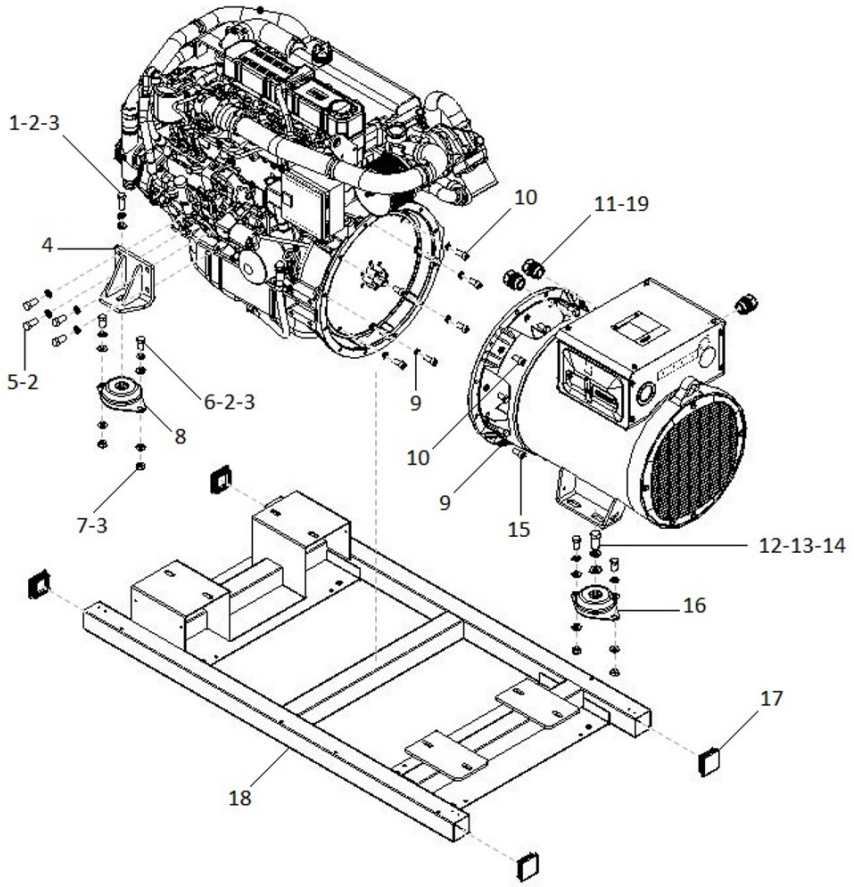

[NS] Not shown

Genset Alternator Kit

D_6057B064 Alternator Kit With Canopy

Fig.	Ref.	Qty.	Descr.	Obs	From	UpTo
1	17410001G	2	Support ANTERIUER			
2	52102359	8	Bolt DIN 933 M12-30 8.8			
3	53033012	8	Washer Grower DIN 127-12			
4	53033010	20	Washer GROWER DIN 127-10			
5	52103308	8	Bolt DIN 912 M10-25 8.8			
6	60900310	2	Connector Press CAPTOR-2000 M32 RAL7001			
7	60900311	2	Screw Connector Press Captor-2000 M32			
8	52102308	12	Bolt DIN 933 M10-25 8.8			
9	60900304	1	Coneector Press PA Grey IP68 M16			
10	60900307	1	Screw Connector Press PA Grey IP68 M16			
11	60900306	1	Connector Press CAPTOR-2000 M25 RAL7001			
12	60900309	1	Screw Connector Press Captor-2000 M25			
NS	19414022	1	Spacer 13X25X10			
NS	51058054	4	Aluminium Rivet 4.0 X 10			
NS	60900510	1	Emergency Stop PUSH BOTTOM			
NS	60900511	1	Stop PUSH BOTTOM Body			
NS	60974073G	1	W Breaker GRAY SEC. 35 TO SYStem ALT.			
NS	60974073M	1	V Breaker BROWN SEC.35 TO SYStem ALT.			
NS	60974073N	1	U Breaker BLACK SEC. 35 TO MAGNETO			
NS	60974076	1	Kit Fan Installation			
NS	60975086	1	Switch Disconnector 125A 3 Poles			
NS	6097A165	1	Amperometric Transformer Bracket			
NS	TP.1.L.14	2	Hollow Toe Terminal Section 1 Length 14			

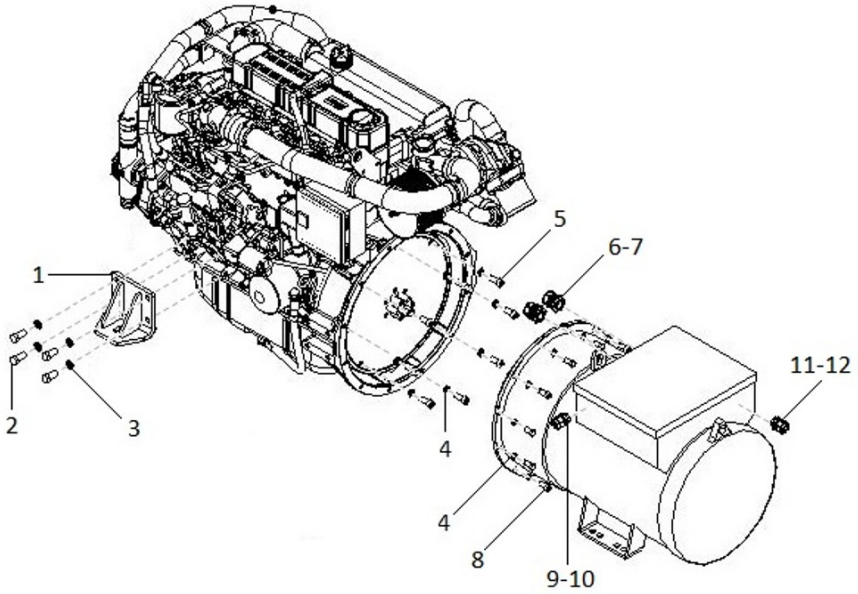

[NS] Not shown

Chassis Spare Parts

D_60574055.01			Chassis			
Fig.	Ref.	Qty.	Descr.	Obs	From	UpTo
1	60574055.01	1	Genset Chassis			

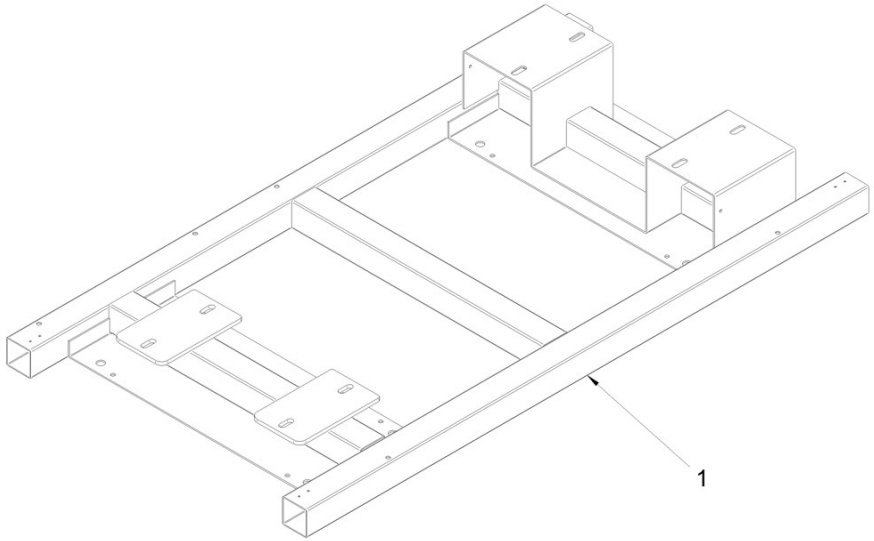

Canopy Spare Parts

D_A1GU_4_1			Cabin			
Fig.	Ref.	Qty.	Descr.	Obs	From	UpTo
1	51058054	16	Aluminium Rivet 4.0 X 10			
2	52103258	10	Bolt DIN 912 M8-25 8.8			
3	52120008	10	Nut DIN 934 M8 8.8			
4	53033008	10	Washer GROWER DIN 127-8			
5	53105104	8	Bolt DIN 7991 M5-10 12.9			
6	60573041.43	4	L Fastening Bracket			
7	60574054.03	1	VERTICAL BAR			
8	60574054.04	1	VERTICAL BAR			
9	60574054.22A	1	Air Output Panel			
10	60574054.24	1	Frontal Panel			
11	6057B041.25	1	Back Panel			
12	60574054.31	1	VERTICAL BAR			
13	60574054.32	1	VERTICAL BAR			
14	60574055.10	1	Cabin Base Board			
15	60574055.20	1	Upper Panel			
16	6057B041.21	2	Side Panel			
17	60574055.22B	1	Side Panel			
18	60574055.30	1	Upper Frame			
19	60574055.61	1	Bottom Frame			
20	6057B041.21A	1	Side Panel			

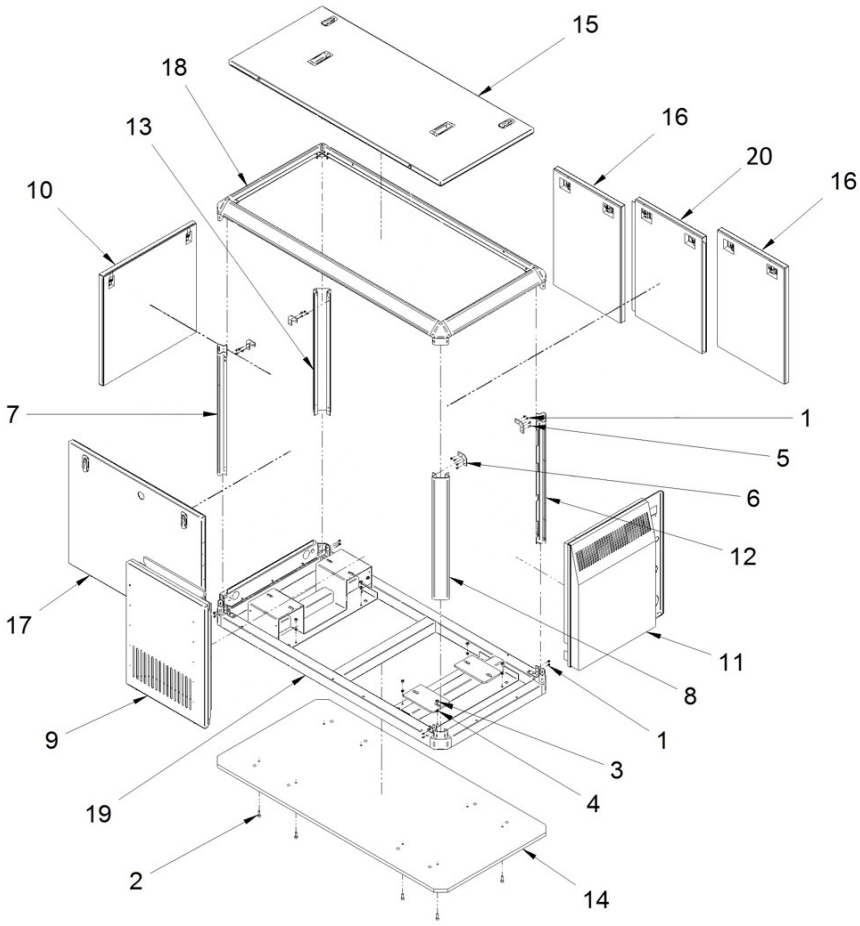

Canopy Spare Parts

D_SM56GTDN_09_2 Canopy Kit

Fig.	Ref.	Qty.	Descr.	Obs	From	UpTo
1	M80501006	1.0	Hose D.10-6			
2	19414011	2	Fuel Hose			
3	M88503242	2.0	DNV Water Intake Hose D. 32-42			
4	M88576300	1.0	Air Aspiration Hose D. 63			
5	M88507587	1.0	Exhaust Hose D. 76			
6	51030005	4	Washer DIN 125-5			
7	51030012	25	Washer DIN 125-12			
8	19414031	3	BOLT 3/8			
9	52102159	4	Bolt DIN 933 M6-30 8.8			
10	52102358	12	Bolt DIN 933 M12-25 8.8			
11	52102361	2	Bolt DIN 933 M12-40 8.8			
12	52120003	4	Nut DIN 934 M3 8.8			
13	52120004	3	Nut DIN 934 M4 8.8			
14	52120005	4	Nut DIN 934 M5 8.8			
15	52120012	12	Nut DIN 934 M12 8.8			
16	53033005	3	Washer GROWER DIN 127-5			
17	53033006	3	Washer GROWER DIN 127-6			
18	53033012	12	Washer Grower DIN 127-12			
19	53038008	6	Washer DIN 6798-A 8			
20	54030008	2	Washer DIN 125-8 INOX.			
21	54082025	4	Clamp DIN 3017 25-40/12 W4			
22	54083063	2	GP Clamp 63-68 W4 STC			
23	54083091	2	GP Clamp 85-91 W4 STC			
24	54103258	1	Bolt DIN 912 M8-25 INOX.			
25	54118004	4	Bolt DIN 7985 M3-10 INOX			
26	54118054	3	Bolt DIN 7985 M4-10 INOX			
27	54118106	4	Bolt DIN 7985 M5-16 INOX			
28	54118156	2	Bolt DIN 7985 M6-16 INOX			
29	54120006	2	Nut DIN 934 M6 INOX			
30	54120008	2	Nut DIN 934 M8			
31	57000361	2	Washer 10-14-1,5			

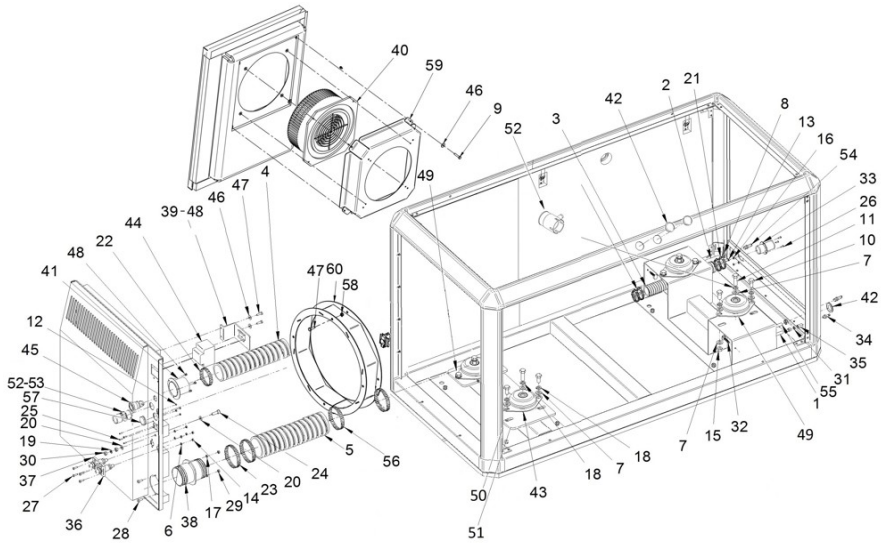

Canopy Spare Parts

D_SM56GTDN_09_2			Canopy Kit			
Fig.	Ref.	Qty.	Descr.	Obs	From	UpTo
32	58018160	2	Screw			
33	60571015	1	Sea Water Wall PASS			
34	60571041.41	1	Gasoil Wall Bushing D.9 MALE			
35	60573041.39	2	ROD Coupling 1/8 BSP			
36	60573047	1	Battery Plug IN			
37	60573048	1	Battery Plug IN			
38	60574024	1	Exhaust Wall PASS 75			
39	60574043.42	1	Switch Disconnector Bracket			
40	6057B050	1	Centrifugal Fan PSB 230V			
41	60574043.47	1	Air Connection D.60			
42	60900508	5	Shutter 31			
43	61674001	2	Engine Mount Type F 40 SHA M16 H 41			
43	61674004	2	Engine Mount Type F BRB 110 B50 SHA M16 H 41		14/04/2023	
44	60975085	1	FOUR PoleS 63A Disconnector			
45	60900510	1	Emergency Stop PUSH BOTTOM			
46	51031006	15	Washer DIN 9021 6			
47	52102157	12	Bolt DIN 933 M6-20 8.8			
48	60573041.64	1	Switch Disconnector Omega Bracket			
49	61674002	2	Engine Mount Type F 35 SHA M12 H 41			
49	61674005	2	Engine Mount Type F BRB 110 B50 SHA M12 H 41		14/04/2023	
50	52102461	4	Bolt DIN 933 M16-40 8.8			
51	51030016	6	Washer DIN 125-16			
52	60900306	1	Connector Press CAPTOR-2000 M25 RAL7001			
53	60900309	1	Screw Connector Press Captor-2000 M25			
54	19414030	3	STRAIGHT COUPLING 3/8			
55	17A14007	1	Fuel Hose DNV			
56	54083097	2	GP Clamp 91-97 W4 STC			
57	60900502	1	Shutter 27			
58	51123006	4	Nut DIN 985 M6 5.6			
59	6057A041.23B	1	Air Outlet Aluminium Sheet Box			
60	60575041.25G	1	Spacer Ring			

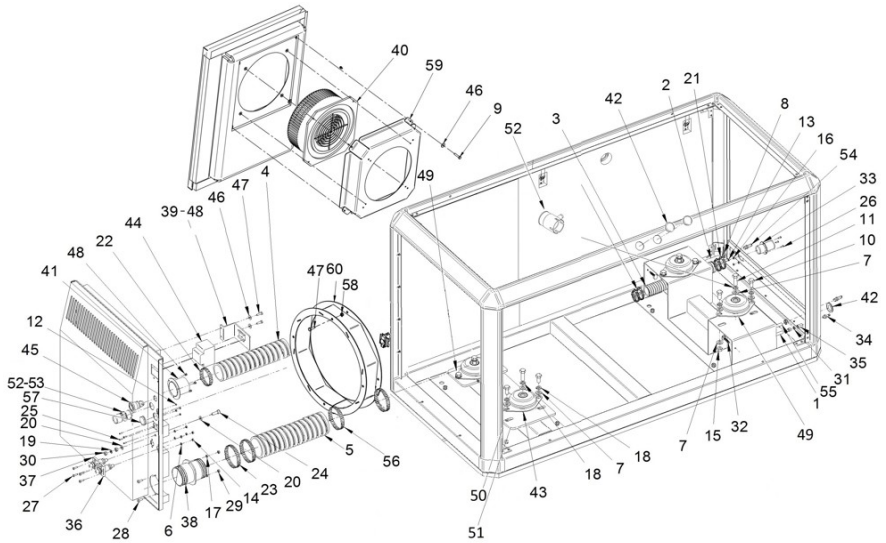

Canopy Spare Parts

D_SM56GTDN_09_2 Canopy Kit

Fig.	Ref.	Qty.	Descr.	Obs	From	UpTo
61	17810011	1	PIPE JOIN			
68	54082032	2	Clamp DIN 3017 32-50/12 W4			
NS	17810011R	1	Pipe Join			
NS	17B21069R	1	TD04HL TURBOCHARGER			
NS	51058054	6	Aluminium Rivet 4.0 X 10			
NS	54081020	1	Clamp DIN 3017 20-32/9 W4			
NS	60594041.39	1	Gasoil Wall Bushing D12 MALE			
NS	60594041.40	1	ROD Coupling 3/8 BSP			

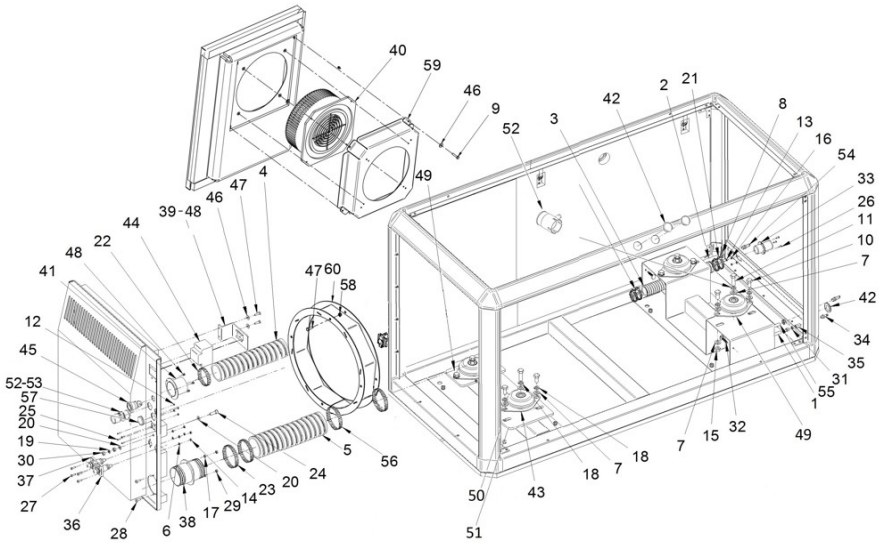

[NS] Not shown

Maintenance Kit

D_GU01_6_1 Gasket Kit

Fig.	Ref.	Qty.	Descr.	Obs	From	UpTo
0	17B10200	1	Gasket Kit, SM-56 Genset			
1	17421014	1	Gasket			
2	17420049	1	Gasket			
3	17524091	1	Gasket,Oil Pipe			
4	17421035	1	Gasket,Exhaust Manifold			
5	17124056	2	Gasket			
6	17421010	1	Rocker Cover Gasket			
7	17420025	1	Gasket,Rear			
8	17121013	1	Gasket			
9	17421011	1	Gasket			
10	17421042	2	Gasket			
11	17421032	1	Gasket IN.MANIFOld			
12	17421004	1	Gasket,Cylinder Head			
13	17420018	1	Gasket,Front Plate			
14	17420040	1	Gasket,Gear			
15	17420047	1	O-Ring D. 140X2			
16	34711003	1	Gasket Cover			
17	13310013	1	Gasket,water pump			
18	17424060	3	O-Ring D. 22X2,4			
19	17822112	1	Gasket, Side Cover			
20	17520017	2	O-Ring D. 30X3,4			
21	17822115.1	4	O-Ring			
22	17421024	1	Gasket			
23	17424062.1	1	Gasket,Side Cover			
24	17420048	1	Gasket			
25	17120058	1	O-Ring D. 13X2,5			
26	17424063	1	Gasket			
27	17420017	1	Gasket			
28	17424055.1	1	O-Ring			
29	17424025G.1	4	Gasket Fuel Return (Genset)			
30	17024013	4	Gasket Nozzle			

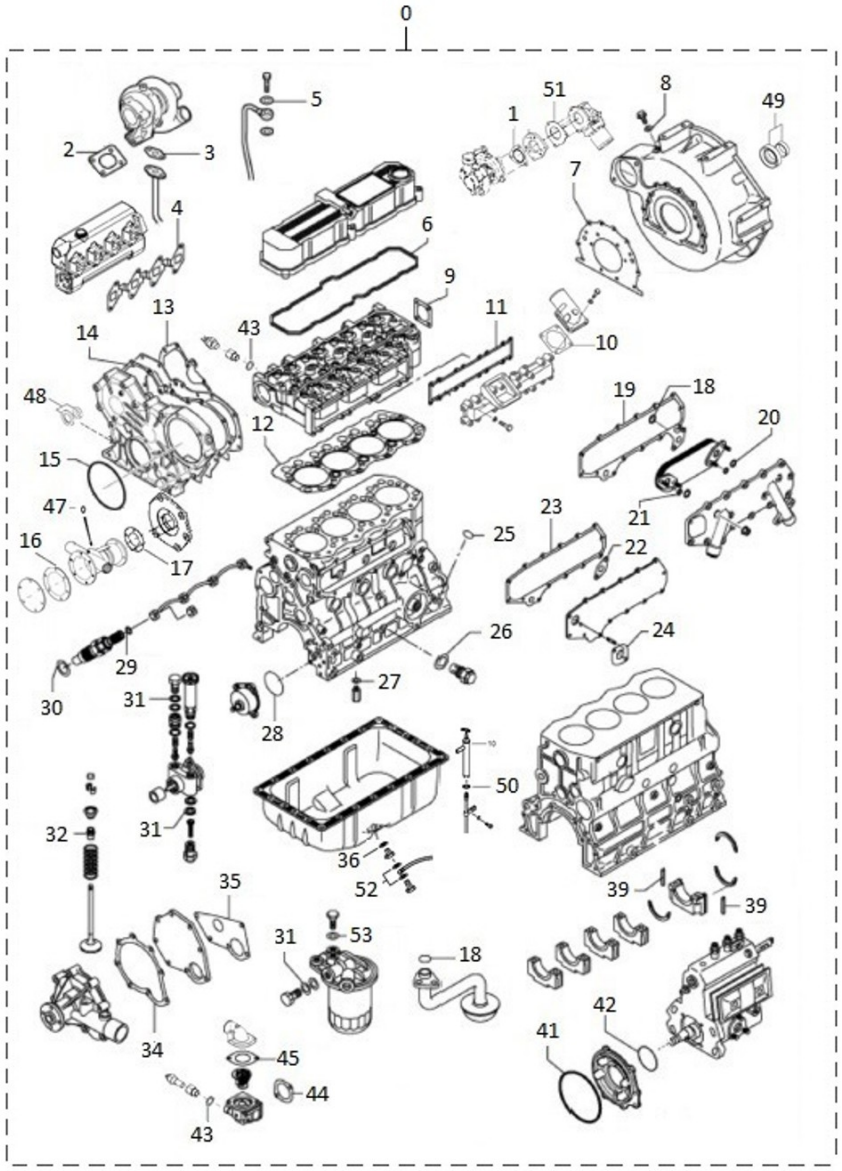

Maintenance Kit

D_GU01_6_1 Gasket Kit

Fig.	Ref.	Qty.	Descr.	Obs	From	UpTo
31	17424008	10	Washer,SealING			
32	17422057	8	Seal, Valve Stem			
34	17421022G.1	1	Gasket, Pump Cover (Generator)			
35	17421041	1	Gasket,Side Cover			
36	17220031	1	Plug			
39	17420112	2	Seal,Valve			
42	17520075	1	O-Ring D. 75X25			
43	56000073	2	Copper Washer 16-23-1,5			
44	17421016G.1	1	Gasket(Generator)			
45	17111021	1	Gasket			
47	33311013	1	O-Ring D. 15X2			
48	17420039.1	1	Seal Assy,Oil			
49	13320063	1	Seal Oil			
51	17813016	1	Gasket			
53	13324011	1	Washer			

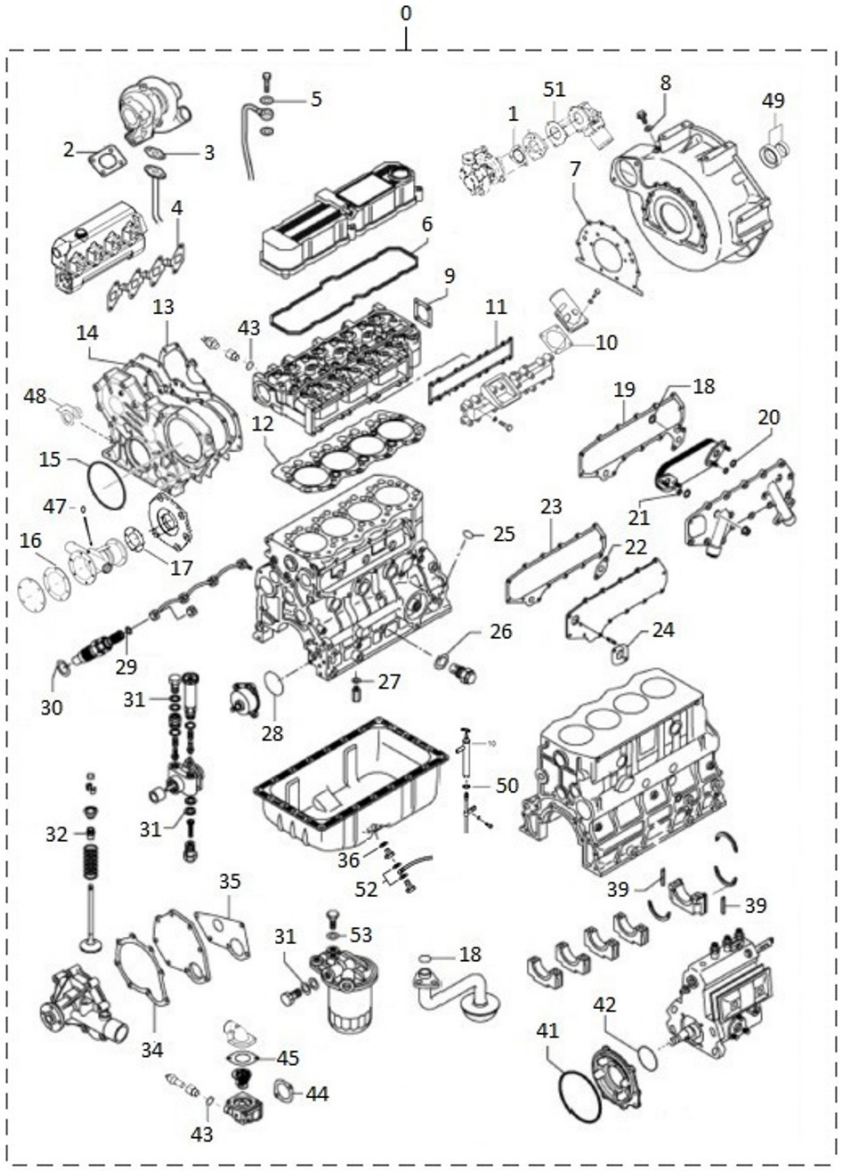

Maintenance Kit

17B10100 Pipe Rubber Set, Water Line SM-56 Genset

Fig.	Ref.	Qty.	Descr.	Obs	From	UpTo
1	13611038	1	Pipe 30-40-75			
2	19411015	1	Elbow			
3	15211053	1	Pipe 38-50-100			
4	17411013	1	Thermostat Water Outlet Elbow			
5	17A10031	1	Silicone Hose Reducer D60-D50			
6	17B10030	1	Silicone Hose Straight Elbow			
7	17411035	1	Elbow Rubber			
8	17811034	1	Rubber Wet Exhaust Inlet Bend			

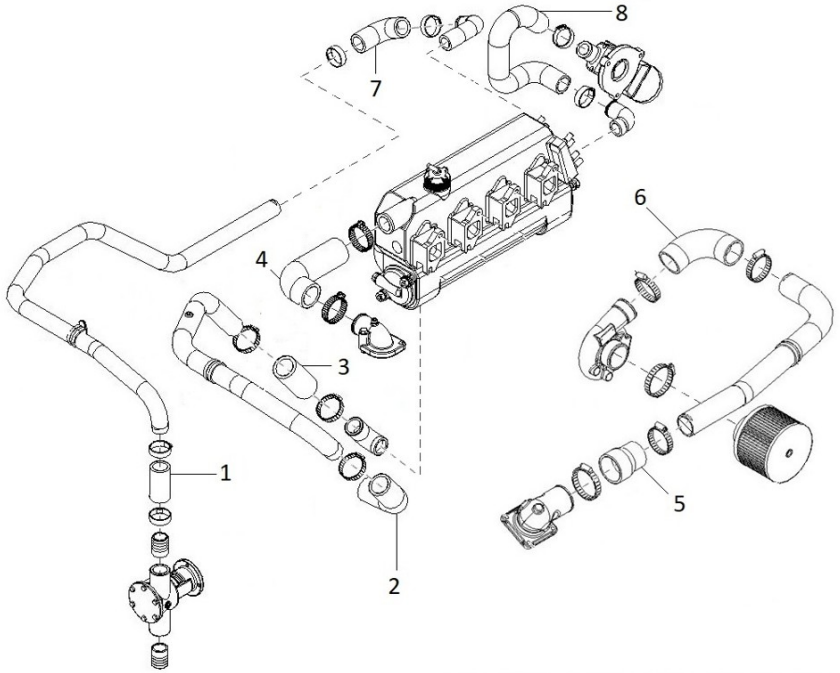

Maintenance Kit

36511000K			Repair Kit Water Pump 1"			
Fig.	Ref.	Qty.	Descr.	Obs	From	UpTo
1	34711008	1	1" Impeller			
2	34711003	1	Gasket Cover			
3	36511020	1	Seal 16-30-7			
4	36511019	1	Seal			
5	33311013	1	O-Ring D. 15X2			
6	13310013	1	Gasket,water pump			

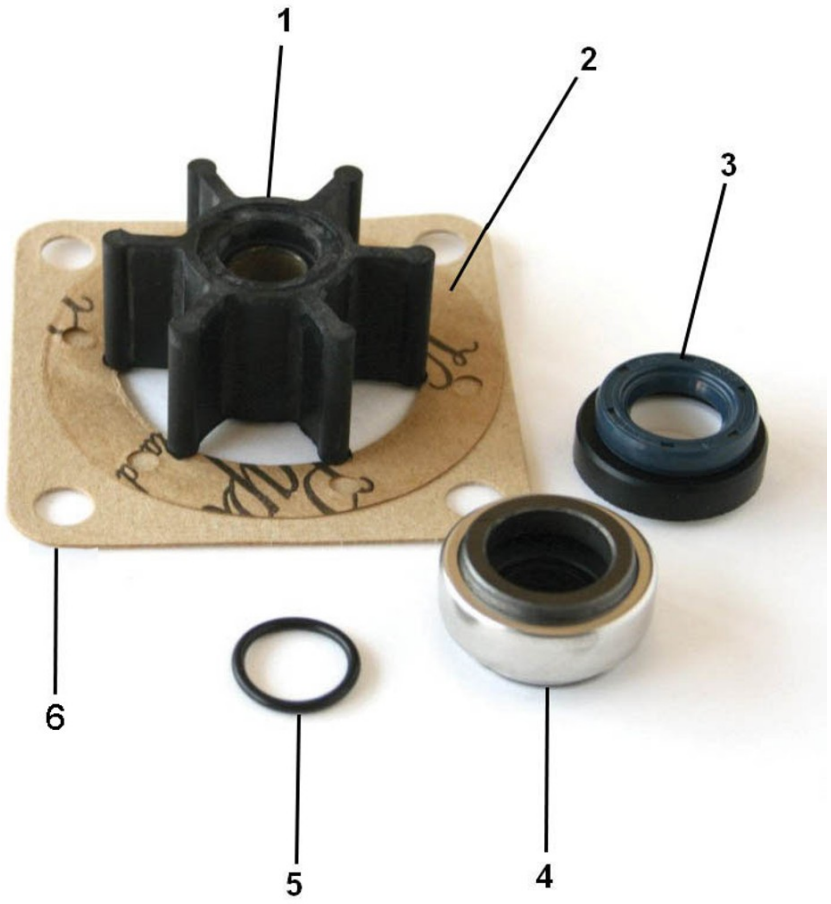

D_UTILFA0960_1 Special Tools

Fig.	Ref.	Qty.	Descr.	Obs	From	UpTo
1	13811063	1	Refrigerator Mounting Key			
2	U3009107300	1	Idler Bushing Installer			
3	U3069100010	1	Camshaft Bushing Installer Set			
4	U3069104500	1	Valve Spring Pusher			
5	U3069113010	1	Oil seal sleeve installer set			
6	U3069121100	1	Gauge Adapter			
7	UMM74007	1	Piston Ring Pliers			
8	U32A9100100	1	Valve Guide Installer			
9	U32A9100300	1	Valve Guide Remover			
10	U32A9100400	1	Oil Pump Bushing Installer			
11	U32A9100500	1	Connecting rod bushing puller			
12	U32A9101100	1	Gauge adapter (direct injection)			

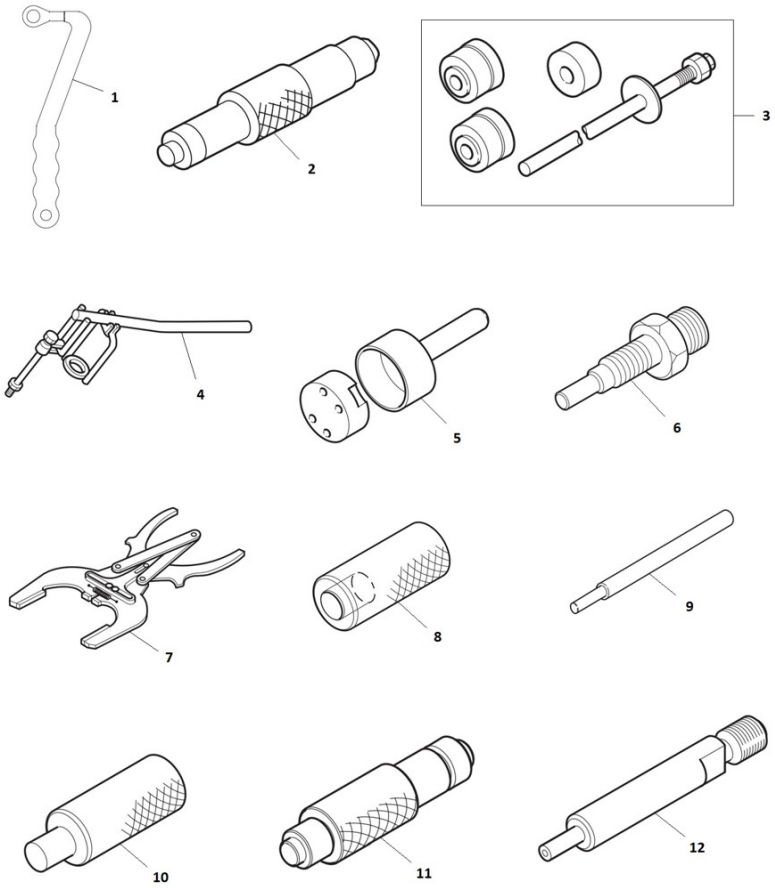

D_UTILFA0960_2 Special Tools
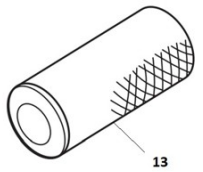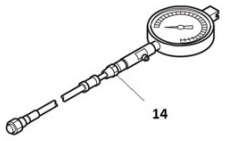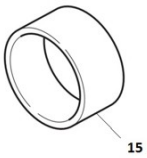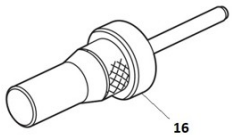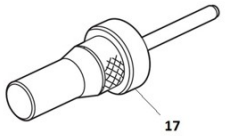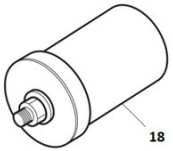
Fig.	Ref.	Qty.	Descr.	Obs	From	UpTo
13	U32A9110200	1	Stem Seal Installer			
14	19440400.2	1	Compression Manometer 10-60 Bar			
15	U3449100200	1	Piston Installer			
16	U3449103020	1	Valve Sheet Insert Caulking Tool			
17	U3679100200	1	Valve Sheet Insert Caulking Tool			
18	UMH061077	1	Idler Shaft Puller