Solé Diesel

Engine MINI-32

VERSION 2017-12

SPARE PARTS MANUAL

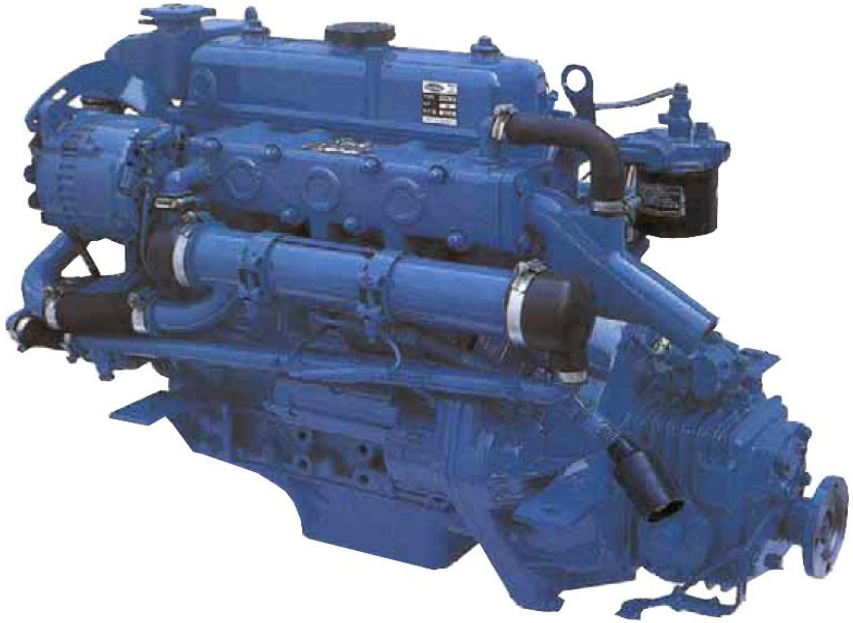

PARTS LIST CATALOGUE

NORMS TO PLACE AN ORDER:

For fast and more efficient service, please specify the following information on spare parts orders that must be preferably done by FAX or e-mail as specified below:

1- Engine model: As shown in identification plate

2- Engine serial number: As shown in identification plate and stamped on crankcase

3- Item description + part number + quantity required

Spare parts requests must be adressed to:

recambios@solediesel.com

Telf.: +34 93 775 44 05

Fax: +34 93 775 30 13

The components shown in the catalog have:

- Figure: Number by which they are represented in scheme
- Description: Trade name of the component
- Quantity: Total number of parts used in the assembly of the part represented (may differ from the total minimum quantities)

Hoses, indicates the total length in meters

The diagrams shown in this catalog of spare parts, have only the purpose to identify the piece in question, its representation is not meaningful and may differ from the actual piece.

In case of doubt, contact Solé Diesel, or your authorized dealer.

The parts i / or references in this catalog are subject to change without notice.

SOLÉ, S.A.

C-243b, Km, 2 - P.O. BOX 15

08760 Martorell (Barcelona) Spain

Download the latest version of this manual HERE

Contents

Engine body, MINI-32

Cylinder Head
Oil Pan & Gear Case
Timing Parts
Cranckcase
Crankshaft, Piston & Connectiong Rod
Oil System
Engine Brackets

Inlet System, MINI-32

Inlet
Water Pump

Cooling System, MINI-32

Cooling System 1
Cooling System 2
MINI-32 Pump Water, Set
1/2" Water Pump, Seawater

Fuel System, MINI-32

Fuel Pipe
Fuel Injection Pump
Injector Body & Nozzle
Governor Parts

Electrical System, MINI-32

Electrical System 1
Electrical System 2

Maintenance Kit, MINI-32

Gasket Kit
Repair Kit Water Pump
Repair Kit Water Pump 1/2"

GearBox MINI-32

GearBox RONIM IV R.2,00

Engine body, MINI-32

D_MI32_1_1			Cylinder Head		
FIG.	REF.	QTY	DESCR.	FROM	UPTO
1	13221003	1	Cap Oil FILLER		
2	13221006	1	Hose BREATHER		
3	13121005	10	Washer FINISHED P		
4-6	13221001	1	Head Assy CYLINDE [NP]		
5	13221002	8	Guide Valve		
6	13220012	4	Cap Sealing		
7	13220013	1	Cap		
8	13221004	1	Gasket Cylinder H		
9	13221011	2	HANGER Engine		
10	13221005	10	Bolt,cylinder head		
11	13221012	4	Bolt Cylinder Heat		
12	13221013	2	Bolt DIN 933 M10-1,25-20 8.8		
14	17820011	1	Plug, Tapered [NP]	12/07/2017	
14	13120011	1	Plug, Tapered [NP]		12/07/2017
15	13221015	2	Washer		
16	13221016	2	Seal		
17-18	13221009	1	Rocker Cover		
18	13221017	1	Pipe		
19	13221010	1	Gasket Rocker COV		

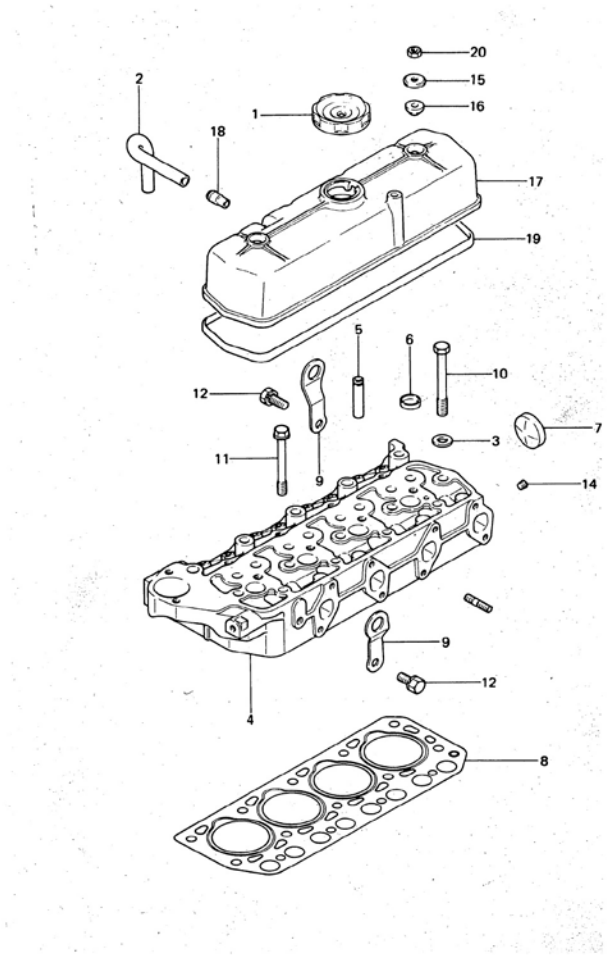

[NP] Not provided

Engine body, MINI-32

D_MI32_1_2			Oil Pan & Gear Case		
FIG.	REF.	QTY	DESCR.	FROM	UPTO
1-3	13220030	1	PAN Assy Oil		
2	13120032	1	Washer 18-23-1,5 [NP]		
3	13120031	1	Plug,oil drain		
6	13220033	1	Gasket Oil PAN		
7	13120034	17	Bolt DIN 933 M8-15 8.8		
8	13220039	1	Seal Oil		
9	13220034	1	Roller Bearings		
10	13220036	1	Roller Bearings		
11	13220035	1	Case Gear [NP]		
12	13220040	1	Gasket Gear Case		
13	13220037	1	Housing Pump Gear		
14	13220038	1	Gasket Housing		
16	13120047	1	Gasket Water Pump		
17	13120042	8	Bolt DIN 931 M8-45 8.8		
18	13120034	2	Bolt DIN 933 M8-15 8.8		
19	13220041	1	Bolt DIN 931 M8-30 8.8		
20	13220042	3	Stud L 54		
21	13220043	1	Stud L 34		
22	13120050	4	Nut DIN 934 M8 8.8		
23	13120049	4	Washer GROWER DIN 127-8		
24	13120049	4	Washer GROWER DIN 127-8		
25	13120037	1	Plug TAPER 1/2		

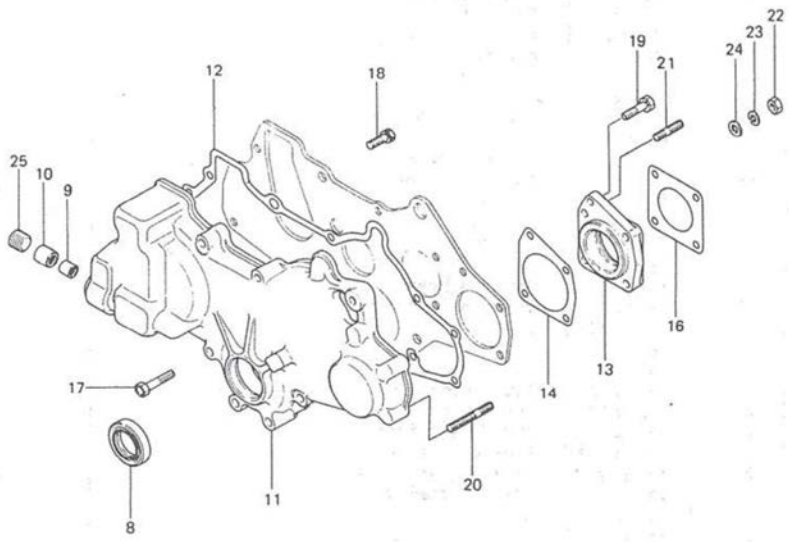

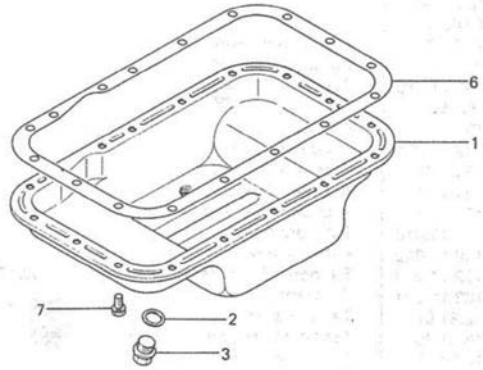

[NP] Not provided

Engine body, MINI-32

D_MI32_1_4			Timing Parts		
FIG.	REF.	QTY	DESCR.	FROM	UPTO
1	13222066	1	Gear PRESSUR Oil		
2	13222067	1	Ball Bearing 6205		
3	13222068	1	Ball Bearing 6204		
4	13222035	1	CamShaft		
5	13222037	1	Gear CamShaft		
6	13222020	1	KEY		
8	13222038	1	Gear Assy IDLER		
9	13222034	1	Bushing IDLER		
10	13222040	1	Shaft Fuel INJ.PU		
11	13222062	1	Ball Bearing 6228		
12	13222043	1	Gear Fuel I/P Cam		
14	13222060	1	Key, Sunk [NP]		
15	13222058	8	Retainer		
16	13222059	16	Lock Valve		
17	13222054	8	Seal Valve Stem		
18	13222057	8	Spring Valve		
19	13222061	8	Tappet		
20	13222055	4	Intake Valve (27,2)		
21	13222056	4	Exhaust Valve (25,2)		
23	13222041	8	ROD PUSH		
25	13222042	8	ARM Rocker		
26	13222063	2	Washer Seat		
27	13222046	1	Shaft Assy		
28	13222049	4	STAY Rocker		
30	13222064	2	Bolt DIN 933 M6-16 8.8		
31	13222046	8	Shaft Assy		
32	53040019	2	CIRClip DIN 471 E-19 [NP]		
33	13222053	2	Bolt		
34	13222065	2	Bolt&Washer		
35	53033010	2	Washer GROWER DIN 127-10		
36	13223005	1	ROD TIE		

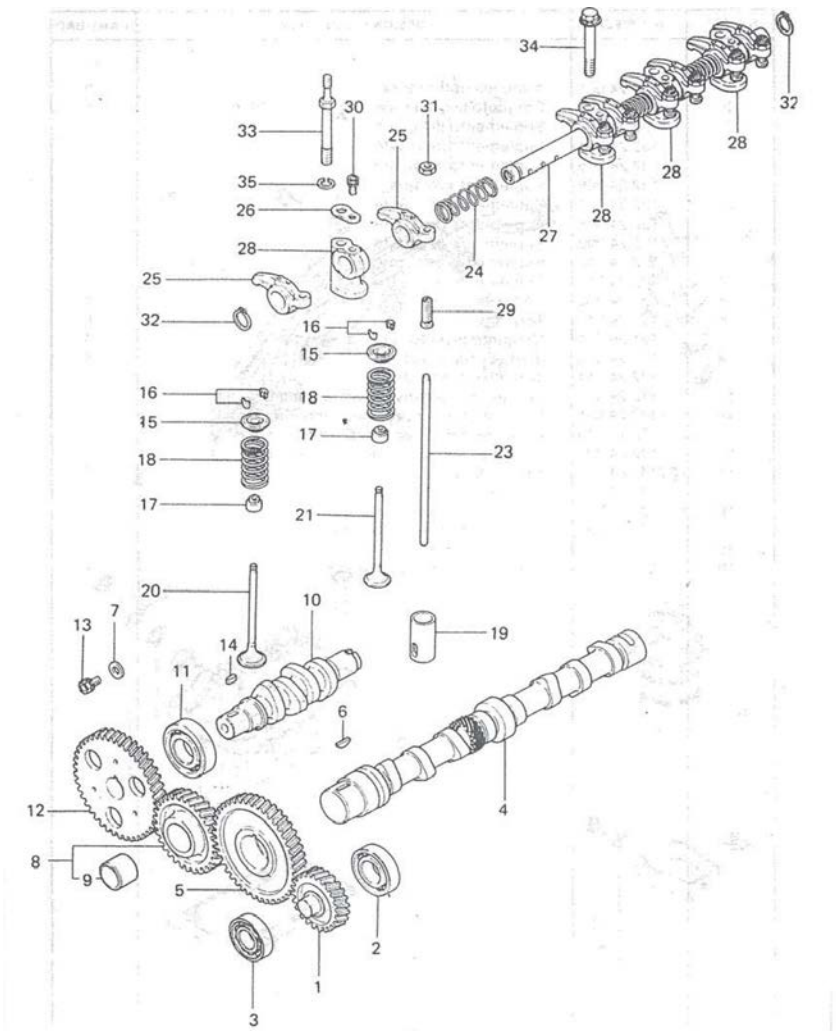

[NP] Not provided

Engine body, MINI-32

D_MI32_1_6			Cranckcase		
FIG.	REF.	QTY	DESCR.	FROM	UPTO
1	13120036	2	Pin Dowel [NP]		02/08/2017
1	17620036.4	2	Pin Dowel	02/08/2017	
2	13220002	4	Seal Side		
3	13220007	1	Guide		
4	13220008	1	Seal Oil		
5-10	13220001	1	Block SUB Assy CY [NP]		
6	13220009	10	Bolt Bearing Cap		
7	13220010	1	Cap Assy,bearing [NP]		
8	13220011	1	Bushing		
9	13220012	2	Cap Sealing		
10	13220013	3	Cap		
11	13220014	1	Shaft IDLER		
12	13220015	1	Case Oil Seal		
13	13220016	1	Gasket Oil Seal		
14	13220017	1	Plate, Front [NP]		
15	13220018	1	Gasket Front PLAT		
16	13220019	6	Bolt DIN 933 M8-20 8.8		
18	13220020	1	Pin [NP]		02/08/2017
18	17620020.4	1	Pin	02/08/2017	
19	13120007	1	Plug Expansion		
20	13120009	2	Bushing		
21	13220021	2	Bushing KNOCK		
22	13220022	1	BUSHING,KNOCK		
23	13220023	3	Plug TAPER		
25	13220003	1	Bearing Set CRANK		
25A	13220004	1	Bearing Set CRANK		
25B	13220005	1	Bearing Set CRANK		
25C	13220006	1	Bearing Set CRANK		
26	13220024	1	Plate REAR [NP]		
27	12120029	1	Guide,lower		
28	13220025	1	Gasket REAR Plate		
29	13220026	1	Pin KNOCK (10X12)		
36	13220027	9	Bolt DIN 933 M12-1,25-30 8.8		
37	13220028	4	Bolt		
38	13220029	2	Gauge Oil LEVEL		

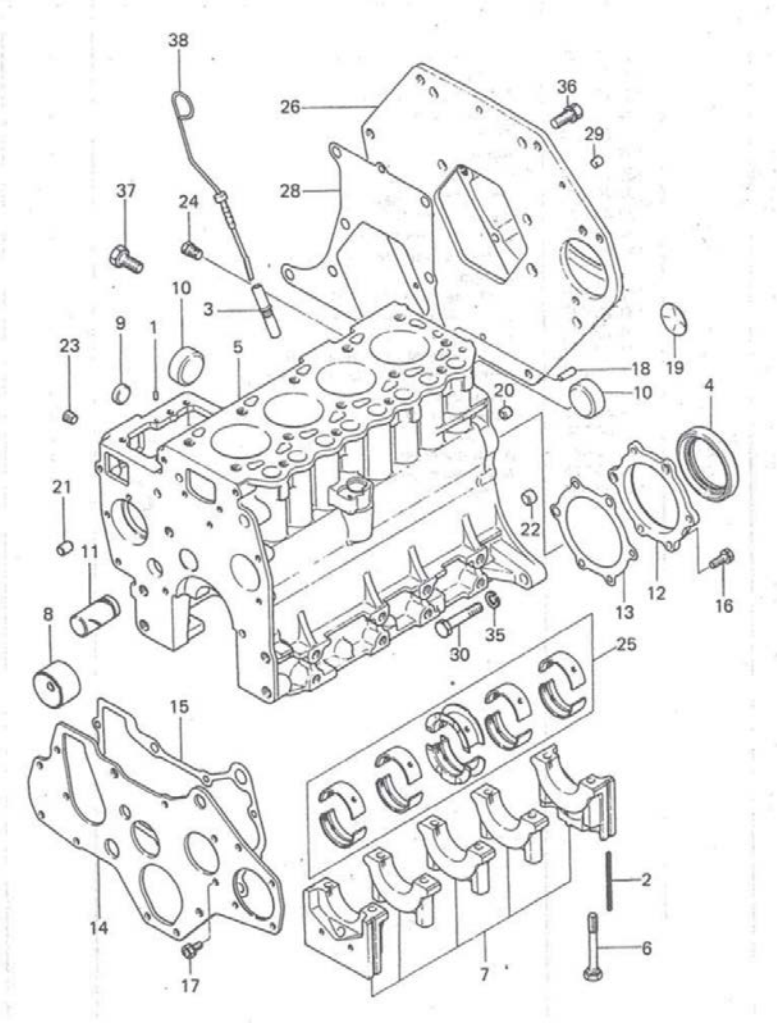

[NP] Not provided

Engine body, MINI-32

D_MI32_1_8			Crankshaft, Piston & Connectiong Rod		
FIG.	REF.	QTY	DESCR.	FROM	UPTO
1	13222001	4	Piston & PISTON P STD		
1A	13222002	4	Piston & PISTON P 0,25		
1B	13222003	4	Piston & PISTON P 0,50		
1C	13222004	4	Piston & PISTON P 0,75		
2	13222006	4	Ring Set Piston STD		
2A	13222007	2	Ring Set Piston O,25		
2B	13222008	4	Ring Set Piston O,50		
2C	13222009	4	Ring Set Piston O,75		
3-5	13222012	4	ROD Assy		
4	13222011	2	Nut,connecting rod		
5	13222013	2	Bolt,connecting rod		
6	13222014	4	METAL Set STD		
6A	13222015	4	METAL Set 0.25		
6B	13222016	4	METAL Set 0.50		
6C	13222017	4	METAL Set 0.75		
7	13222021	1	Gear CrankShaft		
8	13222018	1	CrankShaft		
9	13222024	1	Pulley CrankShaft [NP]		
10	13222026	1	Nut		
11	13222025	1	Washer DIN 125-18		
12	13222023	1	Washer GROWER DIN 127-18		
13	13222020	2	KEY		
14	13122031	5	Bolt		
16	13222029	1	Gear		
16-17	13222027	1	Flywheel SUB Assy [NP]		

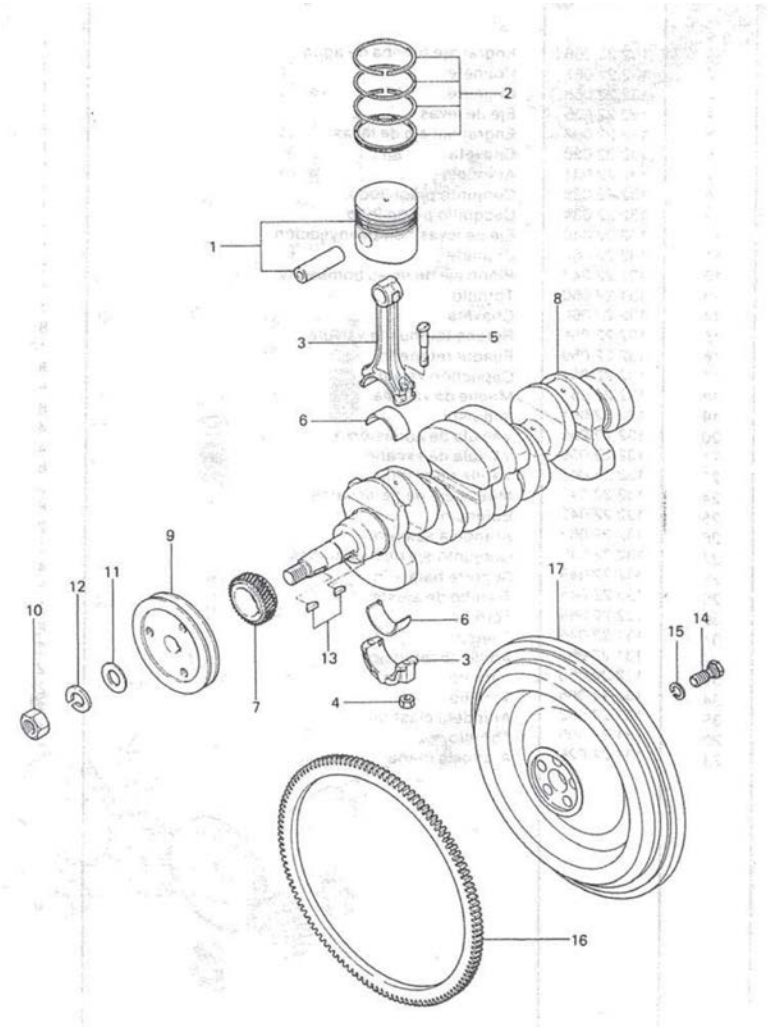

[NP] Not provided

Engine body, MINI-32

D_MI32_1_10			Oil System		
FIG.	REF.	QTY	DESCR.	FROM	UPTO
1	13224043	1	Plunger		
1-10	13224040	1	Pump Assy Oil		
2	13224045	1	Plug		
3	13120032	1	Washer 18-23-1,5 [NP]		
4	13120036	2	Pin Dowel [NP]		02/08/2017
4	17620036.4	2	Pin Dowel	02/08/2017	
5	13224046	1	Body Oil Pump		
6	13224042	1	Rotor Assy Oil PU		
7	13224061	1	Cover Oil Pump		
8	13224044	1	Spring RELIEF		
9	13224049	1	O-Ring		
10	13220023	1	Plug TAPER		
11	13224041	1	Gasket Oil Pump B		
12	13224055	1	Pin DIN 1481 3-16		
12-16	13224054	1	DriveN UNIT SPEED		
13	13224056	1	SLEEVE SPEEDO		
14	13224057	1	O-Ring D. 11X2,5		
15	13224058	1	DriveN UNIT SPEED [NP]		
16	13224059	1	O-Ring D. 19X2,4		
17	13224061	1	Cover Oil Pump		
18	13224062	4	Bolt		
19	13124008	1	Shim Adjusting T=0,7mm		
20	13120049	4	Washer GROWER DIN 127-8		
21	13120048	1	Washer DIN 125-8		
22	13124051	1	Filter Oil Element		
23	13224001	1	Washer		
24-25	13224052	1	SCREEN Assy Oil		
25	13224053	1	Nut DIN 936 M14X1,5 5.6 ZINC		
26	13124060	1	Switch		
27	13224065	1	Elbow,frared Tube		

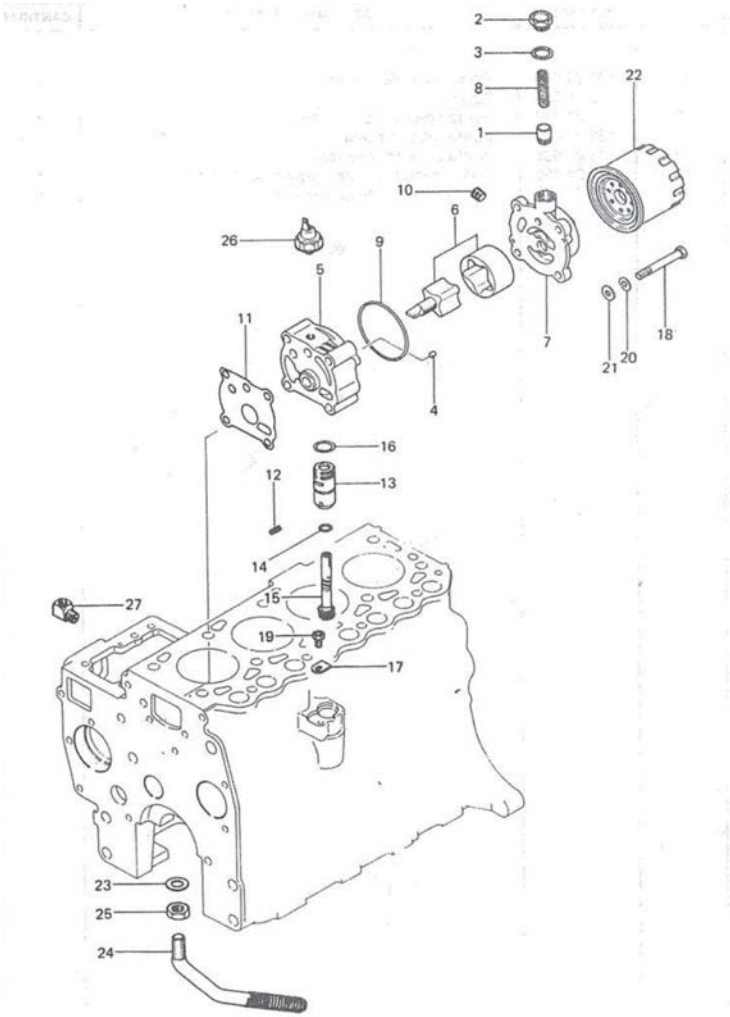

[NP] Not provided

Engine body, MINI-32

D_MI32_1_12			Engine Brackets		
FIG.	REF.	QTY	DESCR.	FROM	UPTO
1	13210001	1	RIGHT Front Bracket		
2	13210002	1	LEFT Front Bracket		
3	52202359	4	Bolt DIN 933 M12-1,25-30 8.8		
4	51030012	4	Washer DIN 125-12		
5	53033012	4	Washer GROWER DIN 127-12		
6	13210010	2	REAR Bracket		
7	52103311	4	Bolt DIN 912 M10-40 8.8		
8	51123010	6	Nut DIN 985 M10 5.6		
9	13110011	2	Stud		
10	13110017	6	Washer DIN 125		
11	52202361	5	Bolt DIN 933 M12-1,25-40 8.8		
12	53038012	6	Washer DIN 6798-A 12		
13	52101363	2	Bolt DIN 931 M12-50 8.8		
14	52202363	1	Bolt DIN 933 M12-1,25-50 8.8		
15	52120012	2	Nut DIN 934 M12 8.8		
16	53033012	2	Washer GROWER DIN 127-12		
17	13114001	1	Pump Fuel Supply		
18	13114002	1	Gasket		
19	52103258	2	Bolt DIN 912 M8-25 8.8		
20	13114003	1	Pipe Inlet		
21	13214005	1	Pump TO Nozzle Hose		
22	13214006	1	Tube TO Filter		
23	13114007	3	Screw SHORT Connector		
24	13114008	1	Screw LONG Connector		
25	51030012	9	Washer DIN 125-12		
26	13114011	1	Connector SPHERICAL OverFLOW		
28	13214007	1	Hose From Filter TO INJ.Pump		
29	13214012	1	Diesel Fuel Filter Bracket [NP]		
30	(*)	1	Not available [NP]		
31	51030006	1	Washer DIN 125-6		
32	53033006	1	Washer GROWER DIN 127-6		
33	14714001	1	Pump,oil Suction		
34	13214020	1	Bracket		
35	52202357	2	Bolt DIN 933 M12-1,25-20 8.8		
36	53033012	2	Washer GROWER DIN 127-12		

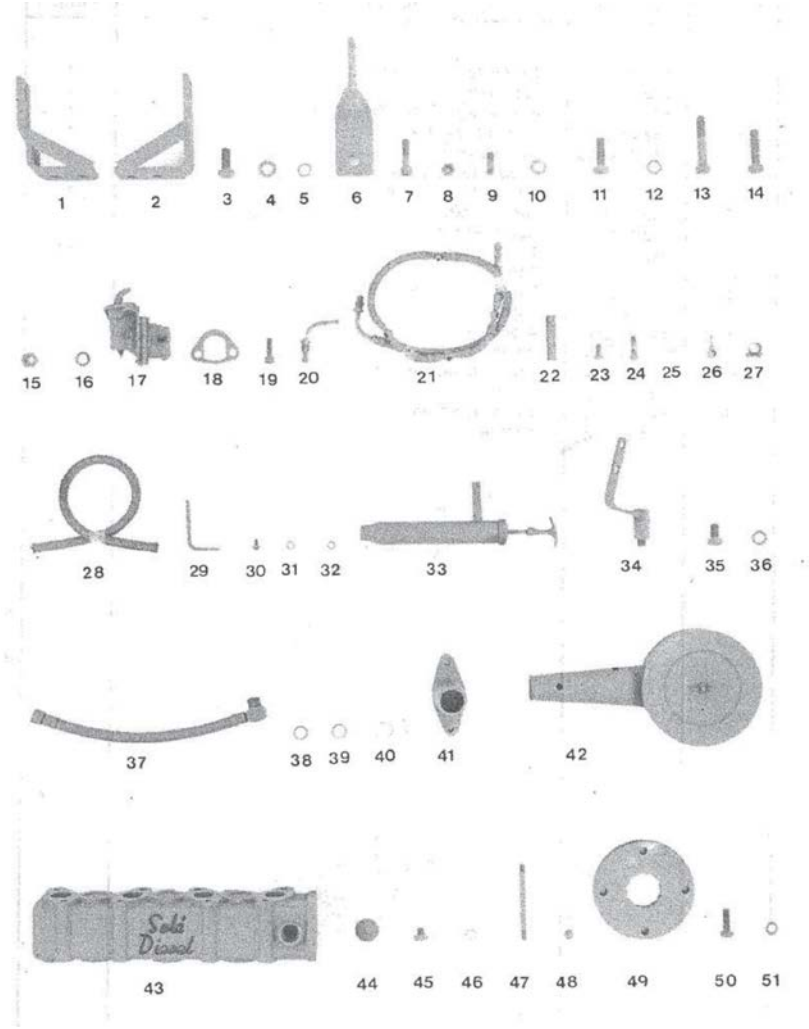

[NP] Not provided

Engine body, MINI-32

D_MI32_1_12			Engine Brackets		
FIG.	REF.	QTY	DESCR.	FROM	UPTO
37	13214021	1	ExtraCTION Hose		
38	56000068	1	Washer 13,5-20-1,5		
39	57000367	1	Washer 13,2-20-1,5		
40	56000077	1	Washer 18-23-1,5		
41	13211010	1	Inlet Pipe		
41A	13221034	1	Gasket Inlet Pipe		
42	13211012	1	Air Filter Assy		
43	13211021	1	Manifold Assy		
44	12111004	6	Cap,cylinder		
45	54102306	1	Bolt DIN 933 M10-16 INOX.		
46	56000062	1	Washer 10,5-16,5-1,5		
47	13211015	8	MANIFOld MOUNTING Stud		
48	13211016	6	Nut DIN 1587 M8		
49	13212001	1	REVERSING Gear Coupling Plate		
50	52102156	4	Bolt DIN 933 M6-16 8.8		
51	53033010	4	Washer GROWER DIN 127-10		

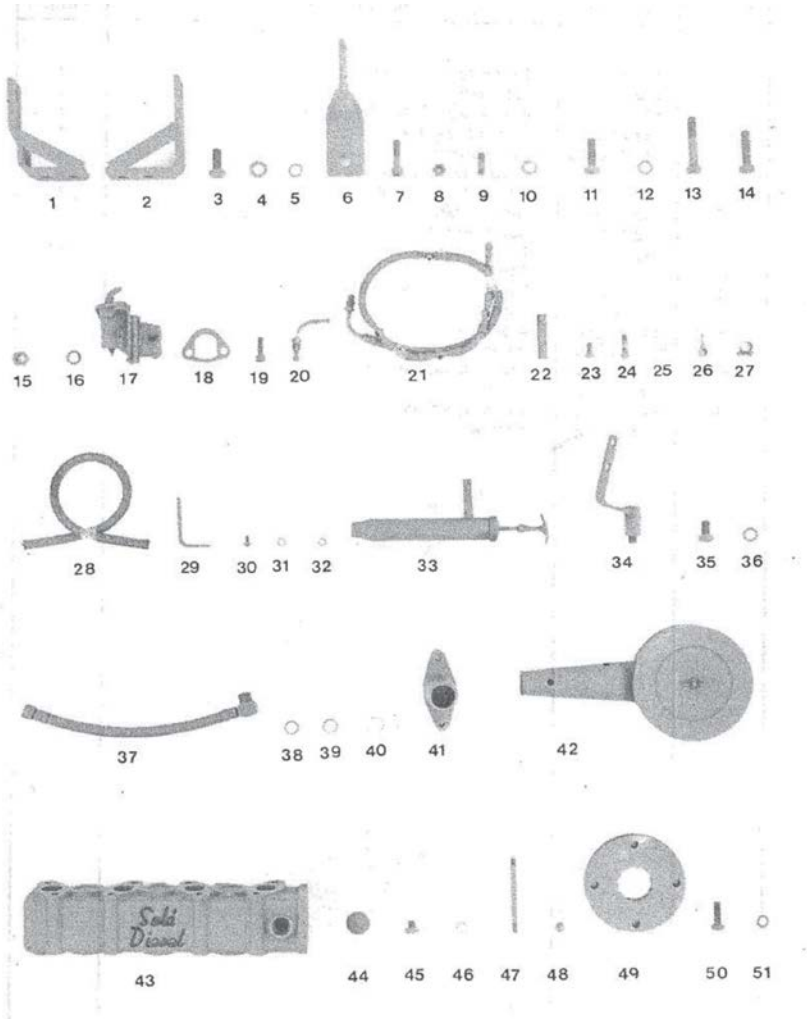

Inlet System, MINI-32

D_MI32_2_1			Inlet		
FIG.	REF.	QTY	DESCR.	FROM	UPTO
1	(*)	1	Not available [NP]		
2	13221017	1	Pipe		
3	13221032	1	Gasket Intake MAN		
5	13221034	1	Gasket Inlet Pipe		
7	13221035	1	Gasket Exhaust Manifold		
10	13221036	2	Bolt		
11	13221037	2	Bolt DIN 931 M8-60 8.8		

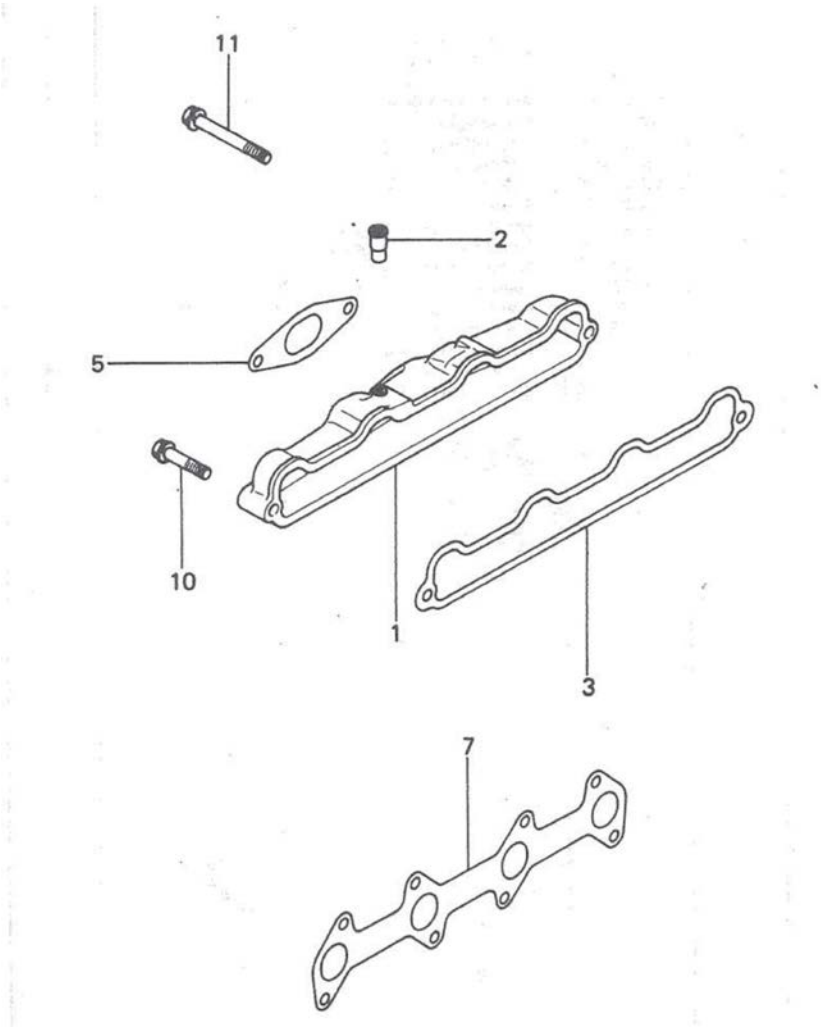

[NP] Not provided

Inlet System, MINI-32

D_MI32_3_1			Water Pump		
FIG.	REF.	QTY	DESCR.	FROM	UPTO
2	13221021	1	Pulley Water Pump		
4	13221020	1	Pump Assy, Water [NP]		
4A	13221041	1	Gasket Water Pump		
5	13221022	1	Gasket Water Pump		
6	13224014	3	Bolt DIN 931 M8-30 8.8		
7	13221037	1	Bolt DIN 931 M8-60 8.8		
8	13120049	4	Washer GROWER DIN 127-8		
9	13120048	4	Washer DIN 125-8		
16	13221026	1	NIPPLE Hose		
18	13221028	1	Belt Type AVX 10 950		
19	13221025	1	Hose Assy Water		
NS	13221027	1	Thermostat (71º) [NS]		

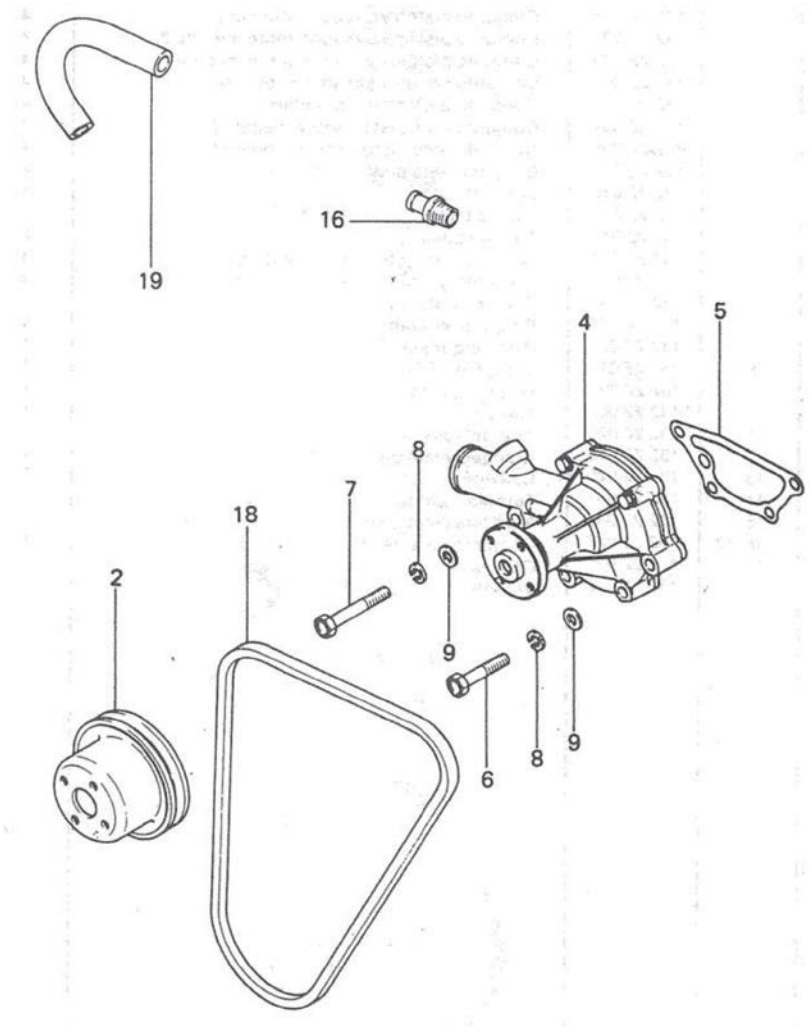

[NP] Not provided
[NS] Not shown

Cooling System, MINI-32

D_MI32_3_2			Cooling System 1		
FIG.	REF.	QTY	DESCR.	FROM	UPTO
1	13211050	1	Expansion Tank and Cap Momunth		
2	15111002	1	Cap Mouth		
3	14711003	1	Cap [NP]		18/01/2017
3	14711003.1	1	Cap	19/01/2017	
4	13211015	2	MANIFOld MOUNTING Stud		
5	13211016	2	Nut DIN 1587 M8		
6	51030012	2	Washer DIN 125-12		
7	13211056	1	Thermostat Holder		
8	13211054	1	Engine Water OutLER Gasket		
9	13211051	1	Pipe From Tank TO Cooler		
10	13211052	1	Pipe From Cooler TO Engine		
11	13211053	1	Bracket Clamp		
12	(*)	1	Not available [NP]		
13	52102156	1	Bolt DIN 933 M6-16 8.8		
14	53033006	1	Washer GROWER DIN 127-6		
15	51030006	1	Washer DIN 125-6		
16	52120006	1	Nut DIN 934 M6 8.8		
17	13211057	1	Rubber		
18	13211037	3	Pipe 30-40-85		
19	54082025	8	Clamp DIN 3017 25-40/12 W4		
20	54081012	2	Clamp DIN 3017 12-22/9 W4		
21	13111039	1	Plug,taper		

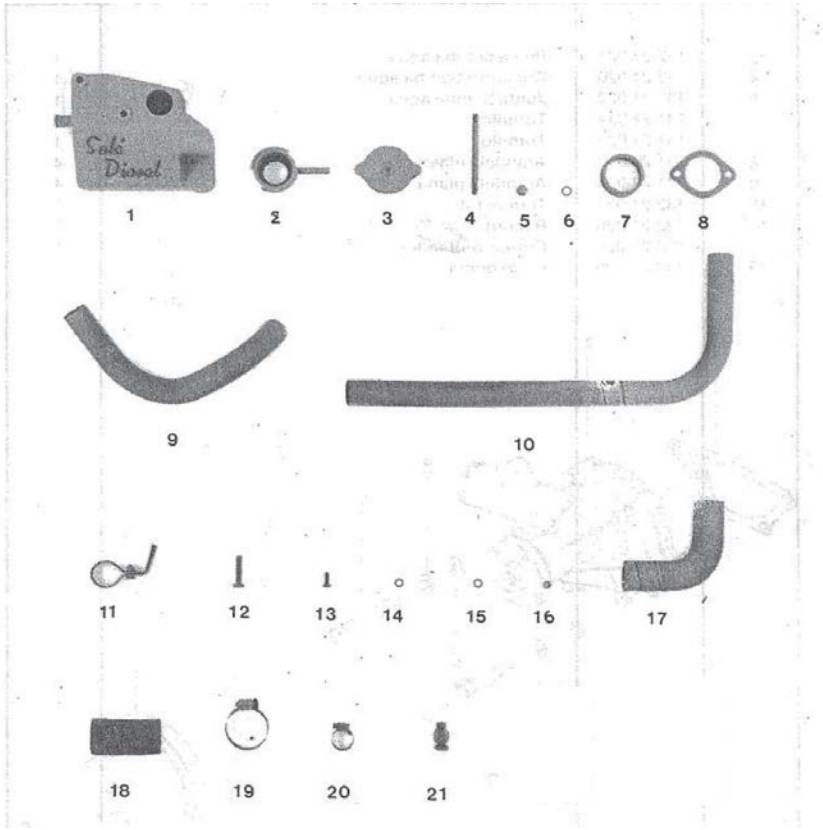

[NP] Not provided

Cooling System, MINI-32

D_MI32_3_3			Cooling System 2		
FIG.	REF.	QTY	DESCR.	FROM	UPTO
1	51030012	8	Washer DIN 125-12		
2	13111023	1	Elbow, Wet Exhaust		
2A	13211031	1	Raccord 1/2"		
3	15113043	1	Exhaust Elbow Gasket		
4	52102258	4	Bolt DIN 933 M8-25 8.8		
5	53033008	4	Washer GROWER DIN 127-8		
6	13211025	1	Hold Down Cover		
7	(*)	2	Not available [NP]		
8	53033006	2	Washer GROWER DIN 127-6		
9	13211026	1	CARRYING Coupling		
10	13211027	1	Water Inlet Bend		
11	13211028	1	Pipe,heat exchanger to pump		
12	13211029	1	Water Cooler		
13	13111038	2	Bolt DIN 933 M10-15 8.8		
14	13211035	1	Exhaust Manifold Outlet Bend		
15	13211031	1	Raccord 1/2"		
16	13211033	2	Pipe 20-28-80		
17	54081020	6	Clamp DIN 3017 20-32/9 W4		
18	13211034	1	Rubber Elbow		
19	13211036	1	Pipe 30-40-100		
20	13211040	2	Water Cooler Cover		
21	54081020	2	Clamp DIN 3017 20-32/9 W4		
22	13211041	1	Cooler Bracket		
23	51083060	2	Clamp "P" 59-63		
24	52102156	4	Bolt DIN 933 M6-16 8.8		
25	53033006	4	Washer GROWER DIN 127-6		

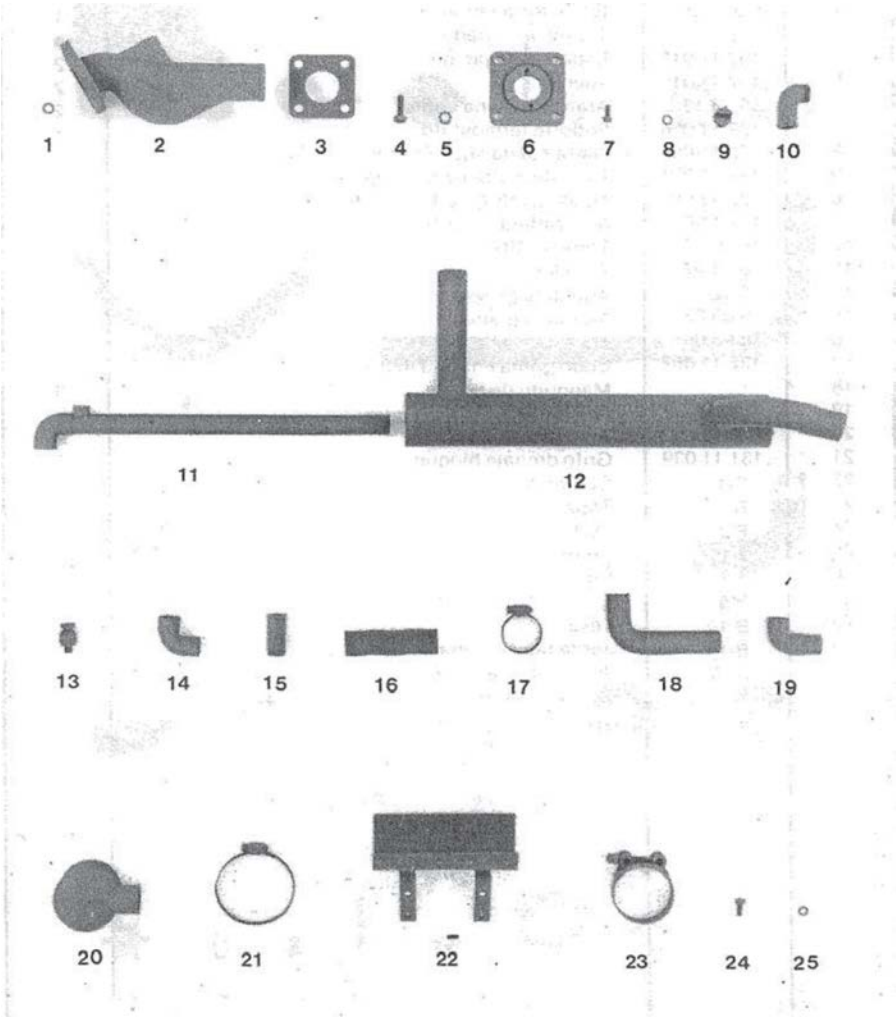

[NP] Not provided

Cooling System, MINI-32

D_33211000			MINI-32 Pump Water, Set		
FIG.	REF.	QTY	DESCR.	FROM	UPTO
1	53041028	1	CIRClip DIN 472 I-28		
2	33211001	1	Body Water Pump		
3	33211015	1	Bushing Spacer		
4	34711017	1	Pin,Dowel		23/05/2017
4	36511017	1	Pin,Dowel	23/05/2017	
5	55307105	1	Bolt DIN 86 W3/16-13		
6	31211005	1	Cam		
8	54102104	6	Bolt DIN 933 M5-10 INOX.		
9	31211008	1	1/2" Impeller		
11	31211002	1	Cover Pump		
12	31211003	1	Gasket Cover		
13	31211009	1	Stud Impeller		
14	31211010	1	Shaft Pump		
15	33211026	1	Disk		
16	32111020	2	Seal Shaft 12-22-7		
17	12110030	2	Ball Bearing 6001-C3		
NS	57000301	1	Washer 5-7,5-1 [NS]		
NS	25210010	1	O-Ring D. 10,77X2,62 [NS]		

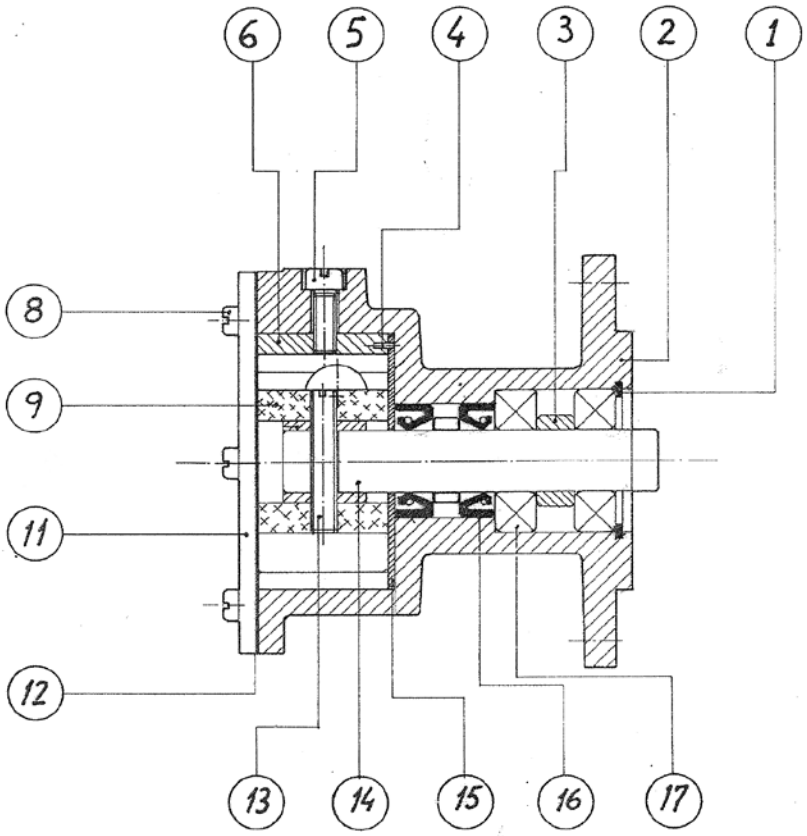

[NS] Not shown

Cooling System, MINI-32

	33411000		1/2" Water Pump, Seawater		
FIG.	REF.	QTY	DESCR.	FROM	UPTO
1	54102104	6	Bolt DIN 933 M5-10 INOX.		
2	31211002	1	Cover Pump		
3	31211003	1	Gasket Cover		
4	31211008	1	1/2" Impeller		
5	31211005	1	Cam		
6	33411017	1	Pin,Dowel		
7	33411026	1	Wearplate		
8	33411019	1	Seal		
9	55307105	1	Bolt DIN 86 W3/16-13		
10	33411001	1	Body,Water Pump		
11	33411010	1	Shaft,water pump		
12	33311013	1	O-Ring D. 15X2		
13	33411020	1	Seal		
14	33411014	2	Ball Bearing 6002-C3		
15	33411015	1	Spacer 32X26X8		
16	53041032	1	CIRClip DIN 472 I-32		

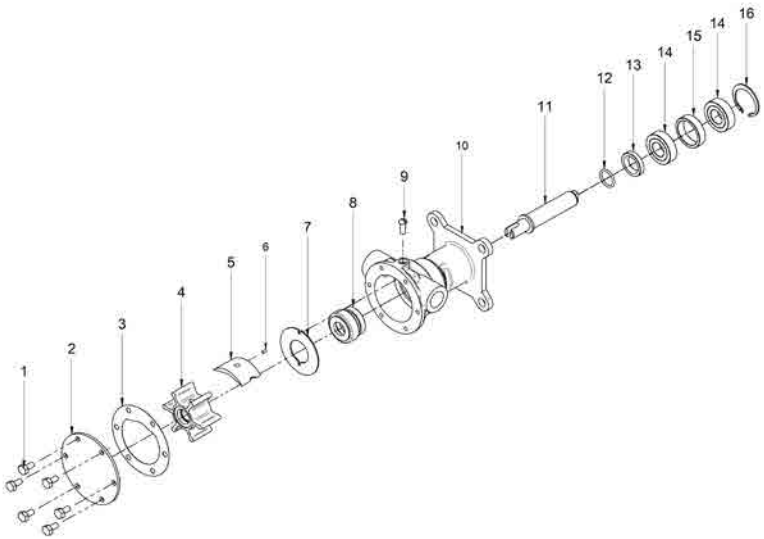

Fuel System, MINI-32

D_MI32_4_1			Fuel Pipe		
FIG.	REF.	QTY	DESCR.	FROM	UPTO
1	13224001	2	Washer		
2	13225001	1	Pump Assy Fuel IN		
3A	13224003	0	Shim Adjusting T=0,2mm [VAR]		
3B	13224004	0	Shim Adjusting T=0,3mm [VAR]		
3C	13224005	0	Shim Adjusting T=0,4mm [VAR]		
3D	13224006	0	Shim Adjusting T=0,5mm [VAR]		
3E	13224007	0	Shim Adjusting T=0,6mm [VAR]		
3F	13224008	0	Shim Adjusting T=0,7mm [VAR]		
3G	13224009	0	Shim Adjusting T=0,8mm [VAR]		
3H	13224010	0	Shim Adjusting T=0,9mm [VAR]		
3I	13224011	0	Shim Adjusting T=1,0mm [VAR]		
5	13224002	1	JOINT EYE		
6	(*)	1	Not available [NP]		
7	13124001	4	Washer		
8	13124013	4	Gasket Nozzle HOL		
9	13224014	8	Bolt DIN 931 M8-30 8.8		
10	13224015	1	Pipe Assy Fuel IN		
11	13224016	1	Pipe Assy Fuel IN		
12	13224019	1	Pipe Assy Fuel IN		
13	13224022	1	Pipe Assy Fuel IN		
14	13124017	3	Clamp (B)		
15	13124018	3	Clamp (A)		
16	13224024	3	Bolt		
17	13124020	1	Filter Assy Fuel		
18	13124021	1	Clamp Filter		
19	13120034	2	Bolt DIN 933 M8-15 8.8		

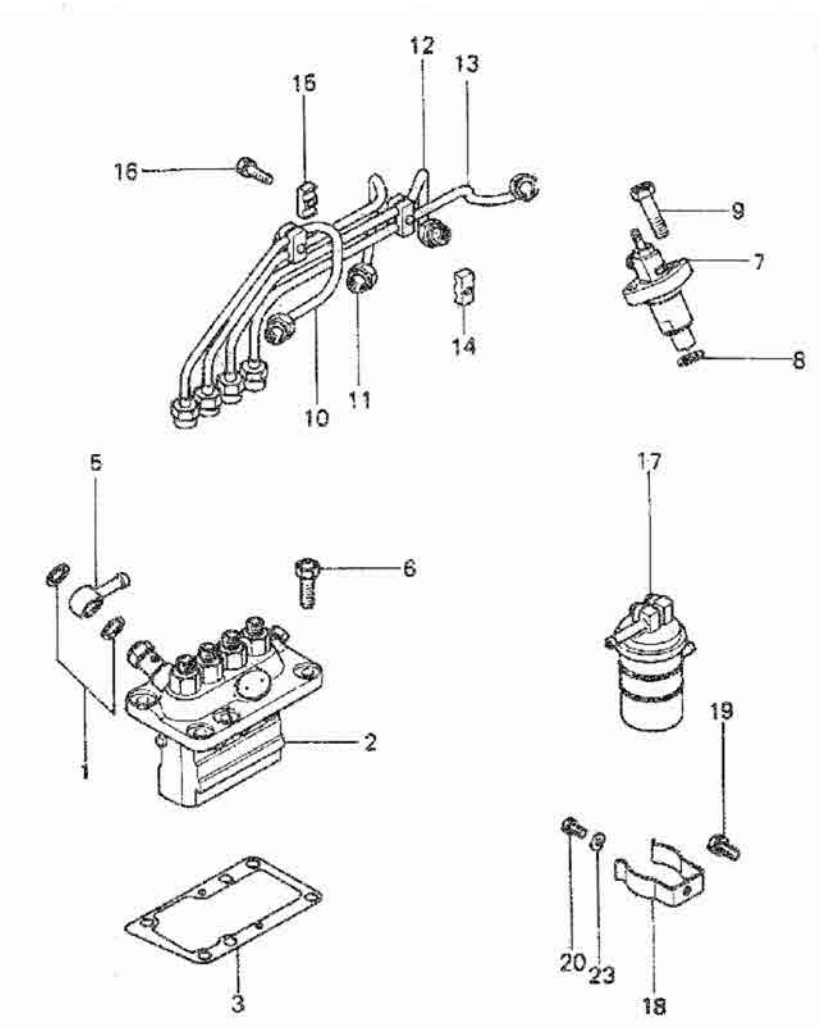

[NP] Not provided

[VAR] Variable according to repair

Fuel System, MINI-32

	D_MI32_4_2		Fuel Injection Pump		
FIG.	REF.	QTY	DESCR.	FROM	UPTO
1	13225005	1	Housing SUB Assy [NP]		
1-29	13225001	1	Pump Assy Fuel IN		
2	13125004	4	Holder DELIVERY V		
3	13225002	4	Spring DELIVERY Valve		
4	13125007	4	Gasket DELIVERY V		
5	13125008	4	Valve SUB Assy DE		
6	13225009	4	Element Assy Pump		
7	13125010	4	SLEEVE		
8	13125011	4	Seat Spring Upper		
9	13125012	4	Spring Plunger		
10	13125021	4	Tappet SUB Assy		
11	13225006	1	RACK Control		
12	13125013	4	Seat Spring LOWER		
13	13125033	4	O-Ring D. 15X2,5		
14	13125022	4	Pin Tappet Guide		
15	13125023	2	Plate		
16	13125030	3	Plate Assy Pressure		
17	13125028	3	Bolt Washer ASSEM		
20	13125026	2	Screw Air BRETATH		
21	13225057	1	Washer Plate		
22	13125025	2	Washer		
23A	13125014	1	Shim Adjusting T=0,60		
23B	13125015	1	Shim Adjusting T=0,2		
23C	13125016	1	Shim Adjusting T=0,3		
23D	13125017	1	Shim Adjusting T=0,4		
23E	13125018	1	Shim Adjusting T=0,5		
23F	13125019	1	Shim Adjusting T=0,25		
23G	13125020	1	Shim Adjusting T=0,35		
24	13225031	1	Spring SMOKE Set		
25	13125032	1	Pin SPLIT		
26	13225051	1	Washer DIN 125-5		
27A	13225042	1	Stopper		
27B	13225043	1	Stopper		
27C	13225044	1	Stopper		
27D	13225045	1	Stopper		

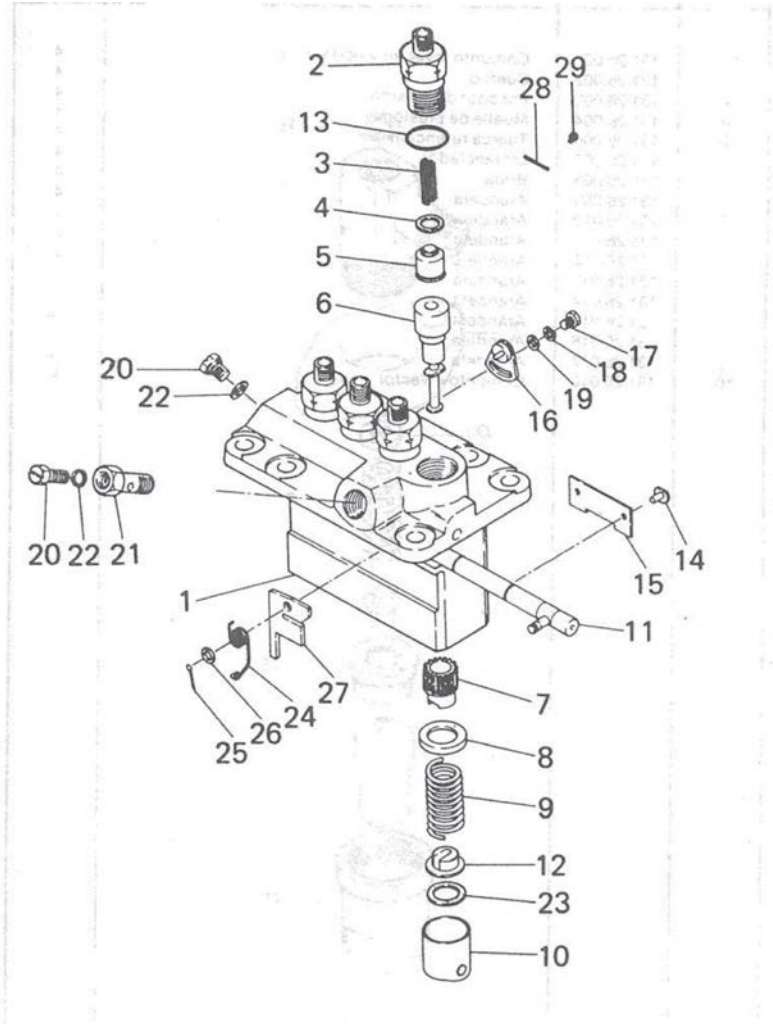

[NP] Not provided

Fuel System, MINI-32

D_MI32_4_2			Fuel Injection Pump		
FIG.	REF.	QTY	DESCR.	FROM	UPTO
27E	13225046	1	Stopper		
27F	13225047	1	Stopper		
27G	13225048	1	Stopper		
27H	13225049	1	Stopper		
27I	13225050	1	Stopper		
27J	13225052	1	Stopper		
27K	13225053	1	Stopper		
27L	13225054	1	Stopper		
28	13225058	1	Plate NAME		
29	13125003	1	RIVET		

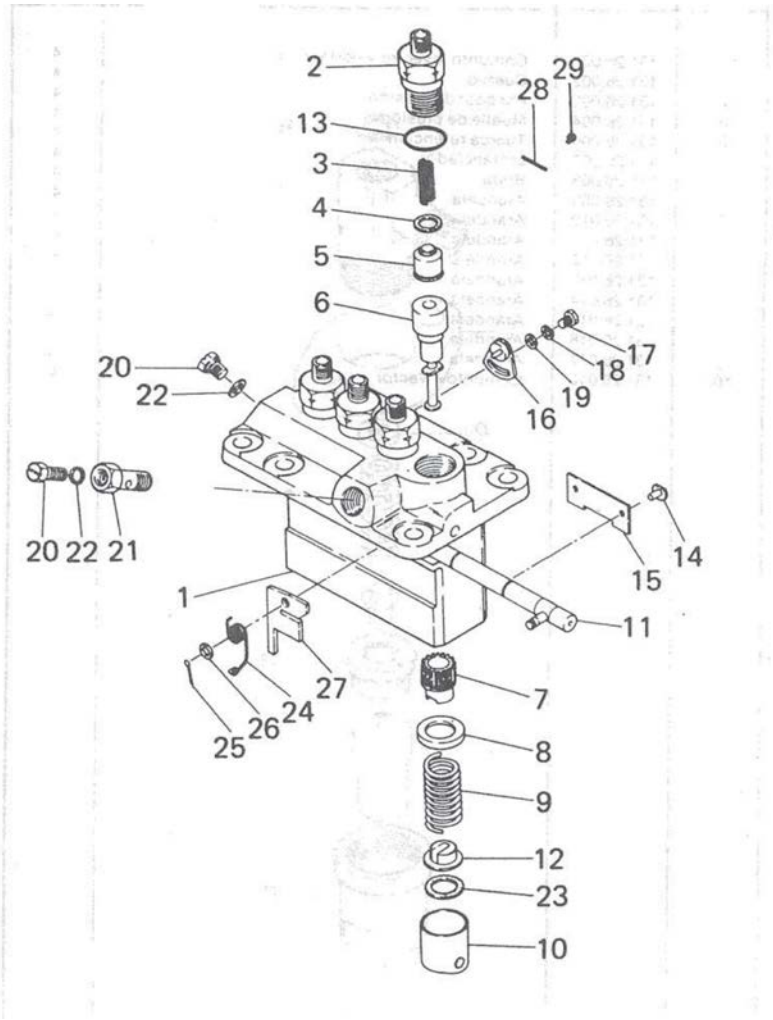

Fuel System, MINI-32

D_MI32_4_3			Injector Body & Nozzle		
FIG.	REF.	QTY	DESCR.	FROM	UPTO
1	13126002	4	Body		
1-10	13126001	4	Nozzle		
2	13126003	4	Pin		
3	13126004	4	Spring		
5	13126006	4	Nut RETAINING		
6	13126007	4	PIECE DISTANCE		
7	13126008	4	Flange		
9A	13126010	1	Washer		
9B	13126012	1	Washer		
9C	13126011	1	Washer		
9D	13126013	1	Washer		
9E	13126014	1	Washer		
9F	13126015	1	Washer		
9G	13126016	1	Washer		
9H	13126017	1	Washer		
10	13126018	4	Nozzle Assy		

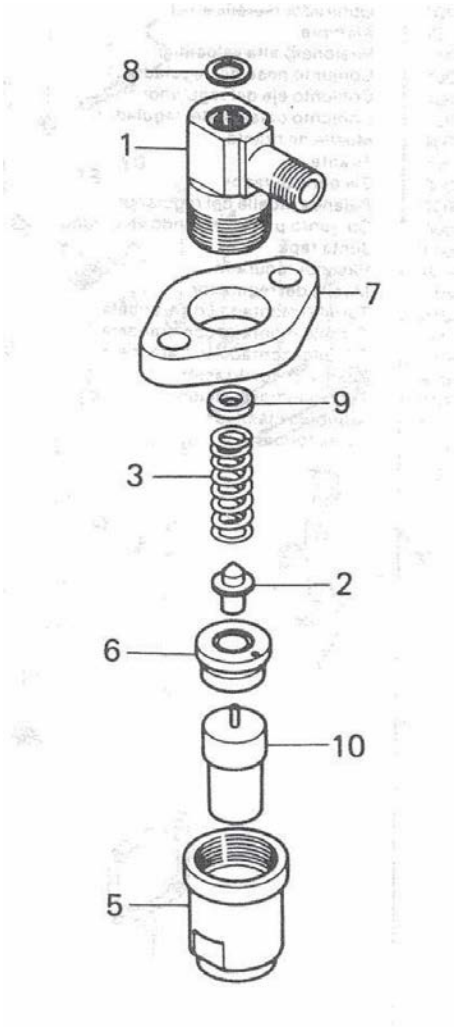

Fuel System, MINI-32

D_MI32_4_4			Governor Parts		
FIG.	REF.	QTY	DESCR.	FROM	UPTO
1	17623020.4	1	Metal,Fuel	02/08/2017	
1	13123020	1	Metal,Fuel [NP]		02/08/2017
2	13123019	1	Metal Sealing		
3	13123017	1	Bolt High Speed		
4	13223001	1	WEIGHT Assy,GOverNOR		
5	13223002	1	Shaft Assy		
6	13223003	1	Lever Assy GOverN		
7	13223004	1	Spring TIE ROD		
8	13223005	1	ROD TIE		
9	13223006	1	Shaft Governor		
10	13223007	2	Lever Governor		
11	13223008	1	Lever Assy Speed		
17	13223014	1	Gasket Cover		
18	13123009	2	Pin GROOVED		
19	13223015	1	Spring GOverNOR		
20	13223016	3	Bolt		
21	13123008	4	Bolt DIN 933 M6-16 8.8		
22	13223017	1	Bolt DIN 933 M6-16 8.8		
23	(*)	1	Not available [NP]		
24	13123013	2	Nut DIN 934 M8 8.8		
25	13120049	2	Washer GROWER DIN 127-8		
26	13123021	1	O-Ring D. 7X1.8		

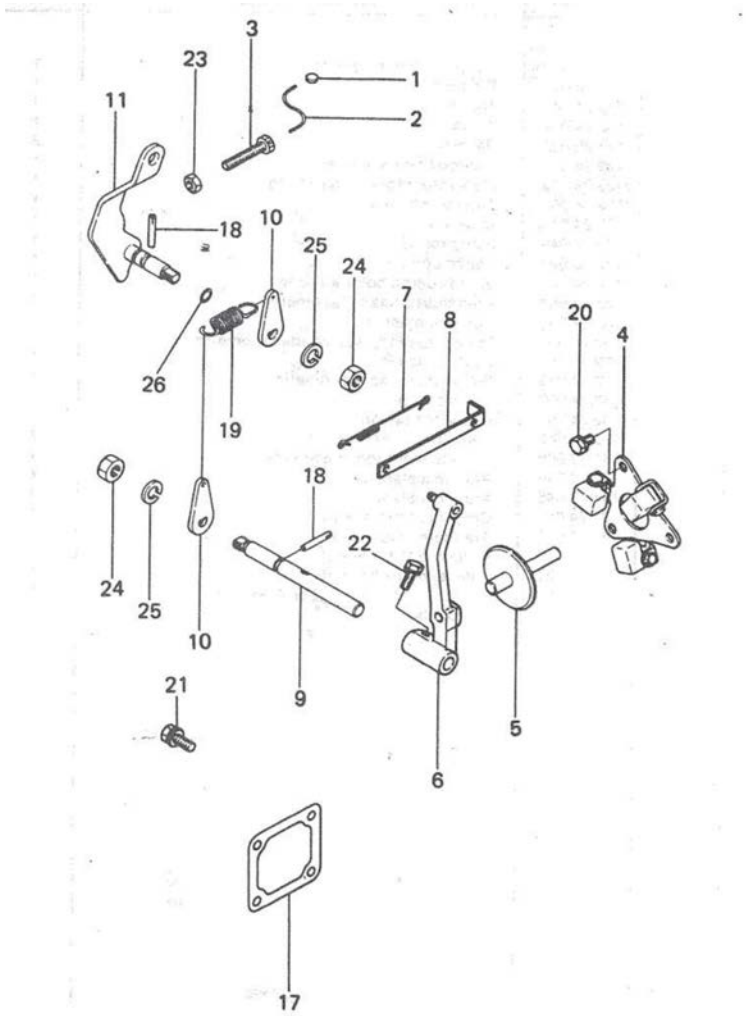

[NP] Not provided

Electrical System, MINI-32

D_MI32_5_1			Electrical System 1		
FIG.	REF.	QTY	DESCR.	FROM	UPTO
1	13117001	1	Stop Solenoid		
2	13217002	1	Bracket [NP]		
3	52102106	4	Bolt DIN 933 M5-15 8.8		
5	53033005	4	Washer GROWER DIN 127-5		
6	13217006	1	Stop ROD [NP]		
8	14619040	1	Spring,stop		
10	13217007	2	REGULATOR SILENTBlock		
11	13217008	1	SILENTBlock Bush		
12	13217010	1	REGULATOR Bracket		
15	53033006	4	Washer GROWER DIN 127-6		
17	51030006	2	Washer DIN 125-6		
18	60900070	1	Thermo-Switch 97ºC		
28	13219056	1	TACHOMETER		
29	60932095	1	LAMP Glow		
32	(*)	1	Not available [NP]		
38	51030006	4	Washer DIN 125-6		
39	53033006	4	Washer GROWER DIN 127-6		
42	13119003	1	SPLIT PIECE		
44	13219004	1	Bush		
46	13219006	1	Control Spring Bracket		
48	53033006	2	Washer GROWER DIN 127-6		
49	13219005	1	Control Spring		
51	51030008	1	Washer DIN 125-8		
53	13219007	1	SHUT-OFF Stop		
55	13117015	1	Belt Type AVX 10 613		
60	51030006	4	Washer DIN 125-6		
61	53033006	4	Washer GROWER DIN 127-6		
67	51030005	2	Washer DIN 125-5		

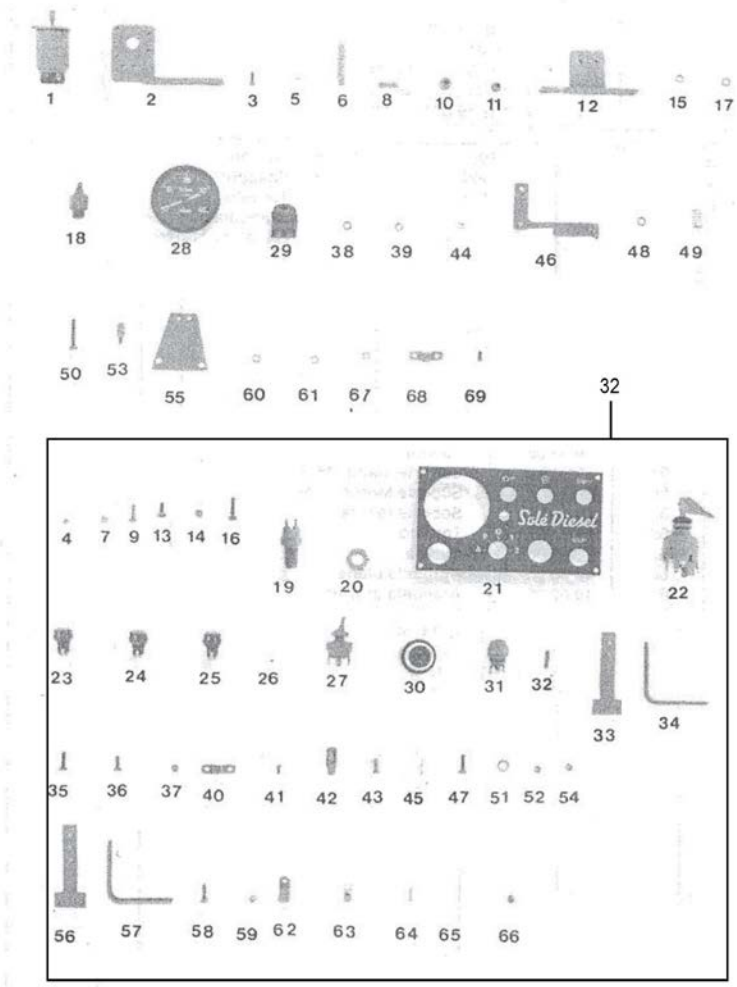

[NP] Not provided

Electrical System, MINI-32

D_MI32_5_2			Electrical System 2		
FIG.	REF.	QTY	DESCR.	FROM	UPTO
1	13227001	1	STARTER Assy 12 V		
2	13227002	1	Bolt DIN 933 M10-1,25-25 8.8		
3	13227003	1	Bolt DIN 933 M10-1,25-40 8.8		
4	13122052	1	Washer GROWER DIN 127-10		
5	13127005	5	Shim Adjusting		
6	13127006	1	Cover Generator		
7	13227010	1	Generator 12V/35A		
8	13227008	1	Bolt		
10	13227007	1	Brace Generator		
12	13127012	1	Bolt DIN 933 M8-25 8.8		
13	13120050	1	Nut DIN 934 M8 8.8		
14	13120049	1	Washer GROWER DIN 127-8		
15	13120048	1	Washer DIN 125-8		
16	13227016	1	REGULATOR		
17	13127017	4	Plug Glow Type V-110		
18	13127018	3	Wire Glow Plug LE		

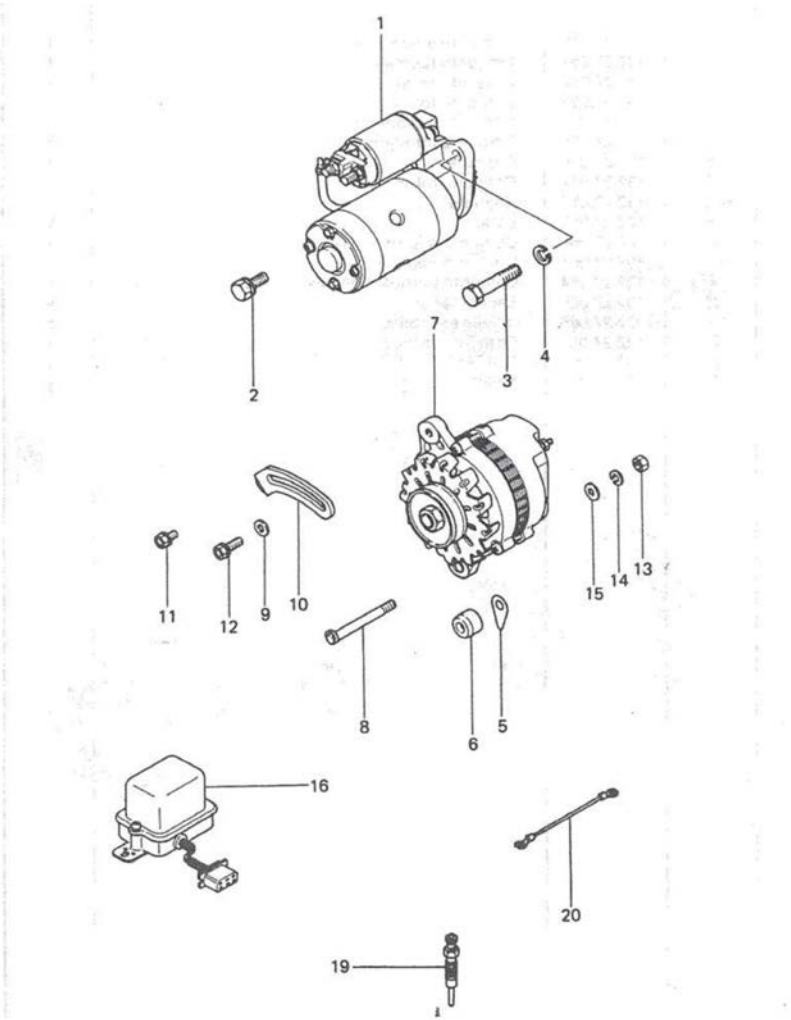

Maintenance Kit, MINI-32

	D_MI32_6_1		Gasket Kit		
FIG.	**REF.**	**QTY**	**DESCR.**	**FROM**	**UPTO**
1	13120032	1	Washer 18-23-1,5 [NP]		
1-39	13220101	1	Kit Gasket		
2	13221016	2	Seal		
3	13211054	1	Engine Water OutLER Gasket		
4	13127005	3	Shim Adjusting		
5	13222054	8	Seal Valve Stem		
6	13224057	1	O-Ring D. 11X2,5		
7	13224001	3	Washer		
12	13220002	4	Seal Side		
13	13220008	1	Seal Oil		
14	13223014	1	Gasket Cover		
15	13224041	1	Gasket Oil Pump B		
16	13124047	1	Shaft Oil Filter		
17	13224049	1	O-Ring		
18	13221022	1	Gasket Water Pump		
19	13220016	1	Gasket Oil Seal		
20	13220025	1	Gasket REAR Plate		
21	13220018	1	Gasket Front PLAT		
22	13220040	1	Gasket Gear Case		
23	13220033	1	Gasket Oil PAN		
24	13221004	1	Gasket Cylinder H		
25	13221010	1	Gasket Rocker COV		
26	13221032	1	Gasket Intake MAN		
27	13221034	1	Gasket Inlet Pipe		
28	13221035	1	Gasket Exhaust Manifold		
30A	13224003	0	Shim Adjusting T=0,2mm [VAR]		
30B	13224004	0	Shim Adjusting T=0,3mm [VAR]		
30C	13224005	0	Shim Adjusting T=0,4mm [VAR]		
30D	13224009	0	Shim Adjusting T=0,8mm [VAR]		
31	13220038	1	Gasket Housing		
32	13125025	2	Washer		
33	13125007	4	Gasket DELIVERY V		
35	13124013	4	Gasket Nozzle HOL		
36	13120047	1	Gasket Water Pump		
37	13220039	1	Seal Oil		

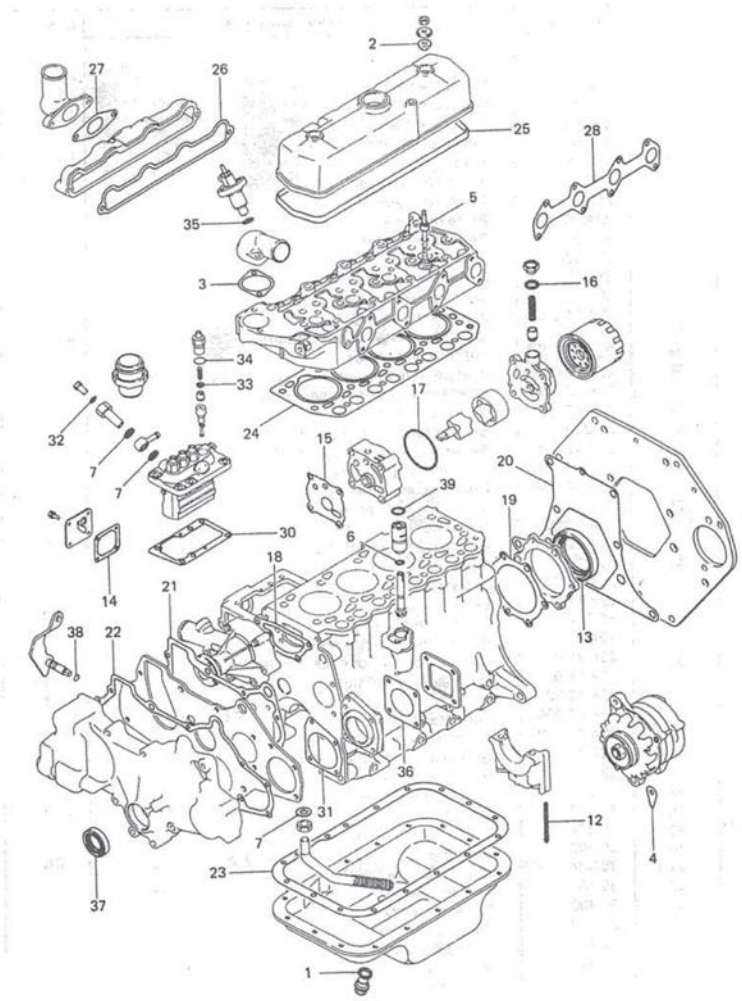

[NP] Not provided

[VAR] Variable according to repair

Maintenance Kit, MINI-32

	D_MI32_6_1		Gasket Kit		
FIG.	**REF.**	**QTY**	**DESCR.**	**FROM**	**UPTO**
38	13123021	1	O-Ring D. 7X1.8		
39	13224059	1	O-Ring D. 19X2,4		

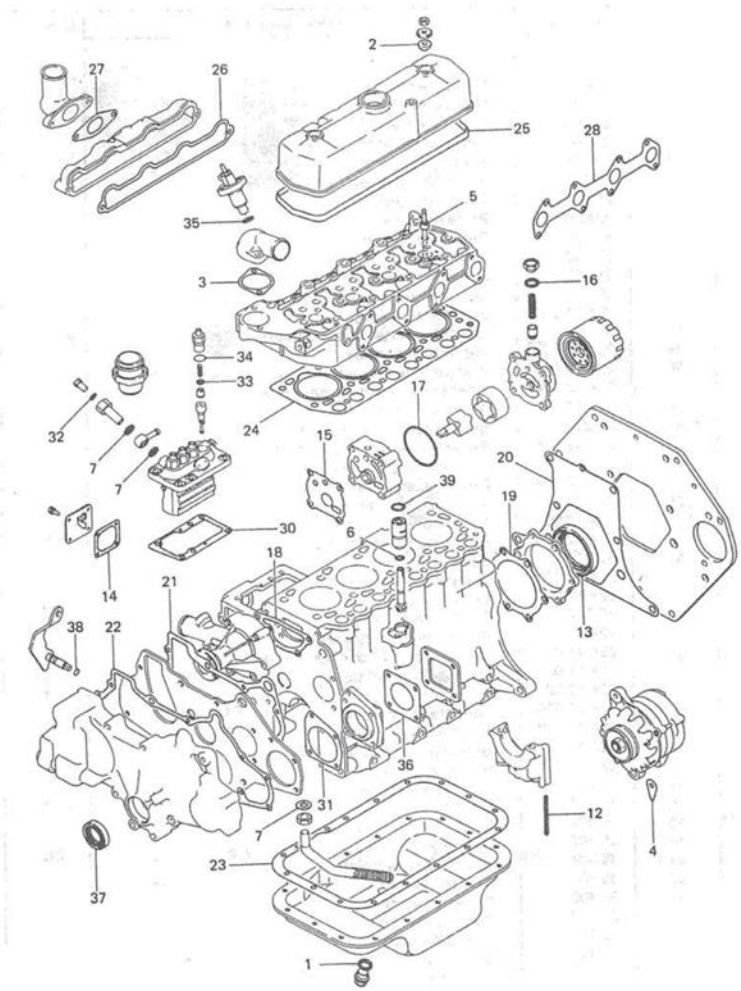

Maintenance Kit, MINI-32

	33211000K		Repair Kit Water Pump		
FIG.	REF.	QTY	DESCR.	FROM	UPTO
1	31211008	1	1/2" Impeller		
2	31211003	1	Gasket Cover		
3	32111020	2	Seal Shaft 12-22-7		
4	13120047	1	Gasket Water Pump		
5	25210010	1	O-Ring D. 10,77X2,62		

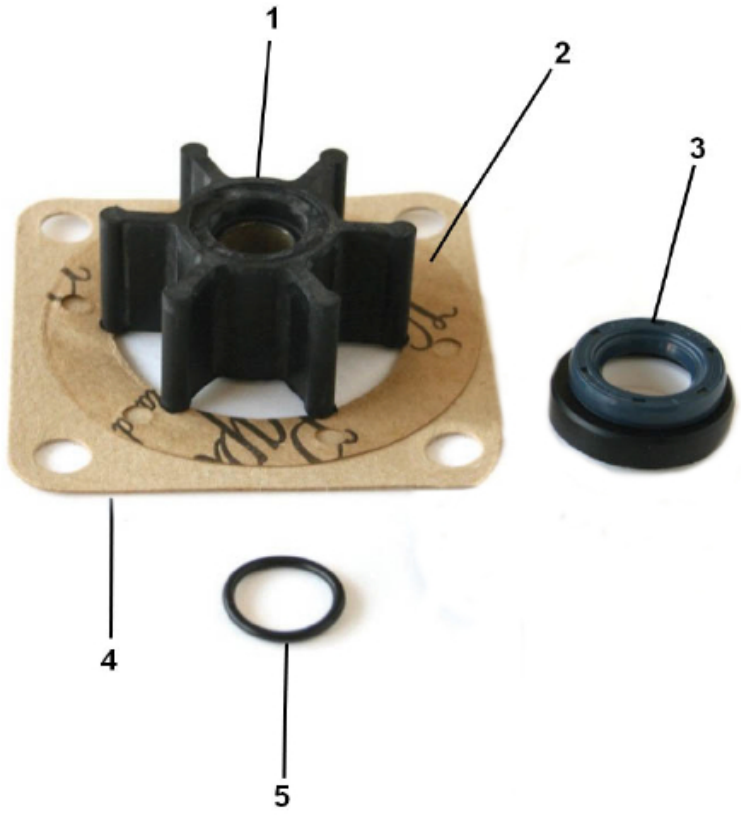

Maintenance Kit, MINI-32

	33411000K		Repair Kit Water Pump 1/2"		
FIG.	REF.	QTY	DESCR.	FROM	UPTO
1	31211008	1	1/2" Impeller		
2	31211003	1	Gasket Cover		
3	33411020	1	Seal		
4	33411019	1	Seal		
5	33311013	1	O-Ring D. 15X2		
6	13120047	1	Gasket Water Pump		

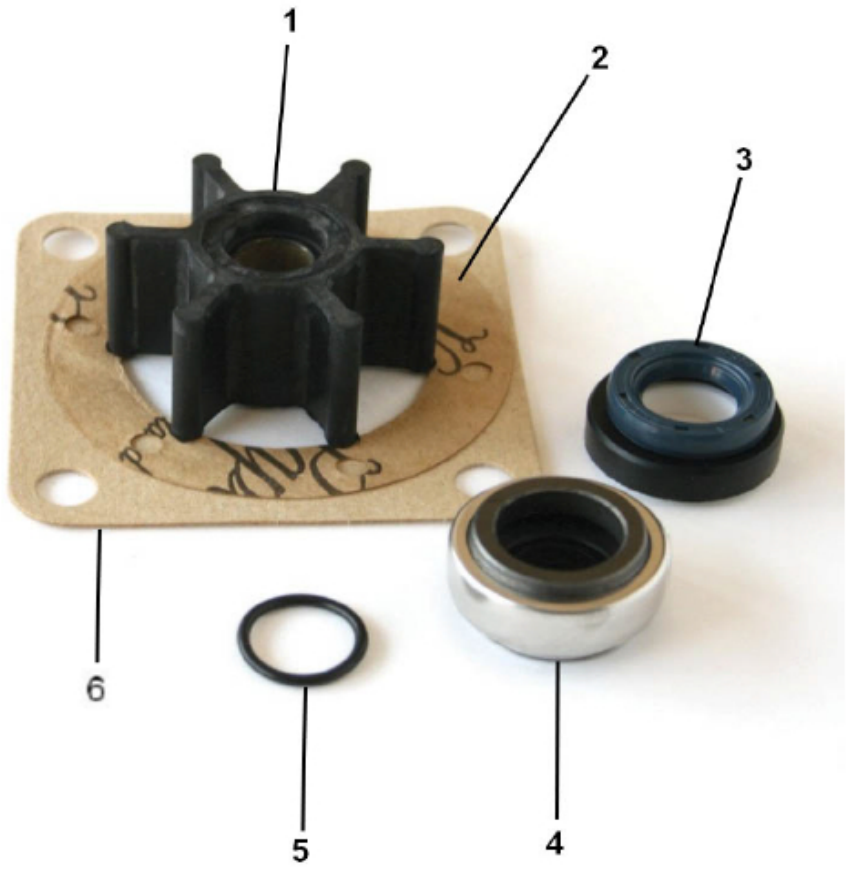

GearBox MINI-32

D_22413000			GearBox RONIM IV R.2,00		
FIG.	REF.	QTY	DESCR.	FROM	UPTO
1	22410001	1	Housing,front [NP]		
1-64	22413000	1	GearBox RONIM-5 R. 2,25:1 MINI-33/34 [NP]		
2	22410002	1	Housing,rear [NP]		
3	22310003	1	Gasket		
5	22310008	1	Plug,oil level		
6	13820044	1	O-Ring D. 11X2,50		
7	51102254	1	Bolt DIN 933 M8-10 8.8		
12	22410005	1	Flange,input		
13	22210103	1	Seal,oil BA 30-47-7		
14	22310102	1	Cover,front [NP]		
15	22310105	1	Gasket		
16	22210204	1	Bearing,needle		
17	22413101	1	Shaft,input 2:1		
18	22210106	1	Bearing,needle		
19	25210222	1	Bolt,blockage		
20	22210204	2	Bearing,needle		
21	22210204	2	Bearing,needle		
22	22210205	2	Ring		
23A	22310218	1	Spacer,bearing		
23B	22410218	1	Spacer,rear bearing		
24	22410204	1	Bearing,needle		
25	22410205	1	Ring,bearing		
26	22413203	1	Gear,front 2:1		
27	22310217	1	Spacer,Gear		
28	22410201	1	Shaft,output [NP]		
29	22310232	1	Cone,clutch [NP]		
30	22410210	1	Gear,rear		
31	22410224	1	Ball Bearing 6305-NR		
32	22410223	1	Seal,oil 35-47-7		
33	22210225	1	O-Ring D. 20X23X1,5		
34	22410209	1	Gasket		
35	22410208	1	Cover,rear [NP]		
36	22410225	1	Flange,output		
37A	51030012	2	Washer DIN 125-12		
37B	51030016	1	Washer DIN 125-16		

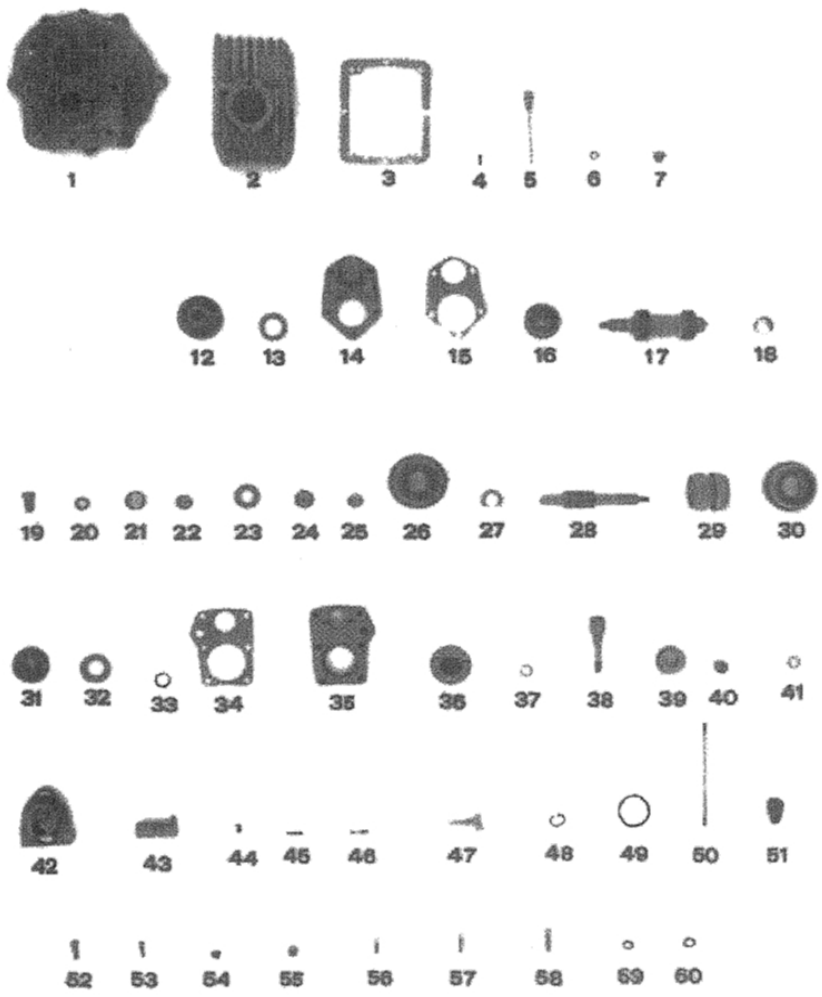

[NP] Not provided

GearBox MINI-32

D_22413000			GearBox RONIM IV R.2,00		
FIG.	REF.	QTY	DESCR.	FROM	UPTO
38	22310301	1	Intermediate Shaft		
39	22210302	1	Gear,INTERMEDIATE		
40	22210306	1	Bearing,needle		
41	22310304	1	Washer,friction [NP]		
42	22310401	1	Control Assy		
43	22310402	1	EXCENTRICA,control		
44	25210418	1	Eccentric Command		
45	53052310	1	Pin DIN 1481 4-20		
46	25210411	1	Spring		
47	22510423	1	ARM, control		
48	25210408	1	O-Ring D. 18,3X25,5X3,6		
49	22310417	1	O-Ring D. 49X2,5		
50	25210424	1	Lever,control		
51	22110416	1	Handle		
52	52102258	1	Bolt DIN 933 M8-25 8.8		
53	52103157	2	Bolt DIN 912 M6-20 8.8		
54	52120006	2	Nut DIN 934 M6 8.8		
55A	51123016	2	Nut DIN 985 M16 5.6		
55B	51123012	1	Nut DIN 985 M12 5.6		
56	52101258	11	Bolt DIN 931 M8-25 8.8		
57	52101259	2	Bolt DIN 931 M8-30 8.8		
58	52101260	5	Bolt DIN 931 M8-35 8.8		
59	51030008	20	Washer DIN 125-8		
60	56000116	1	Washer 12,5-20-2		
61	22410226	1	Cover [NP]		
62	32111023	1	Gasket		
63	52102156	2	Bolt DIN 933 M6-16 8.8		
64	57000353	2	Washer 6,2-11-1,5		

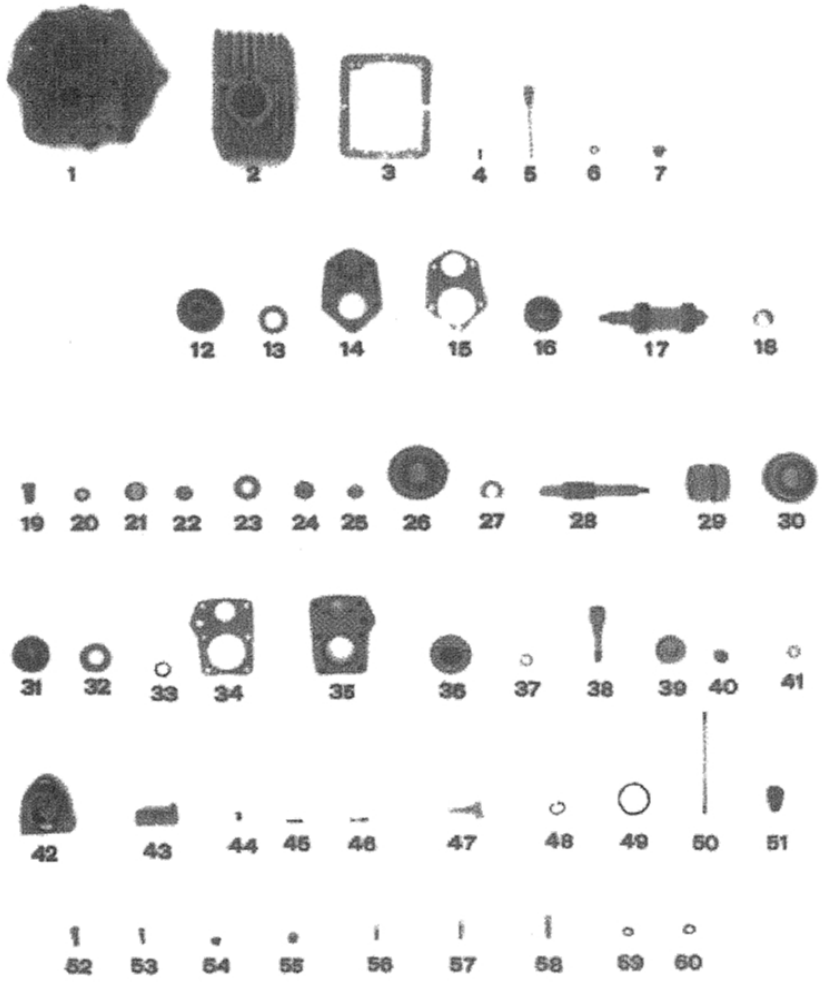

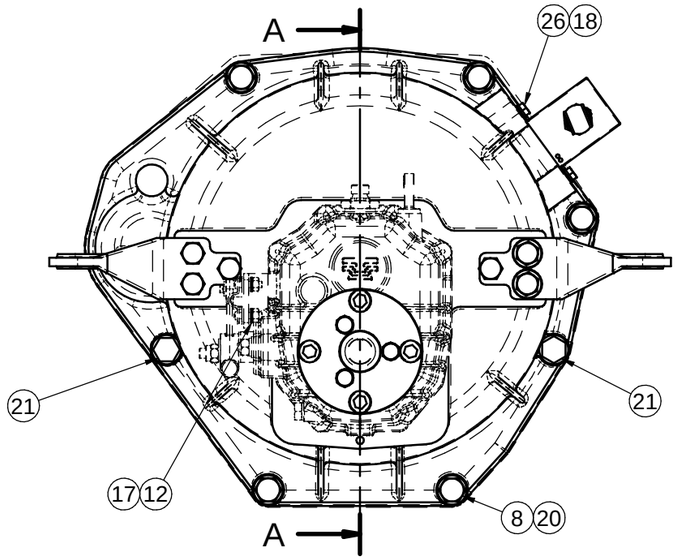

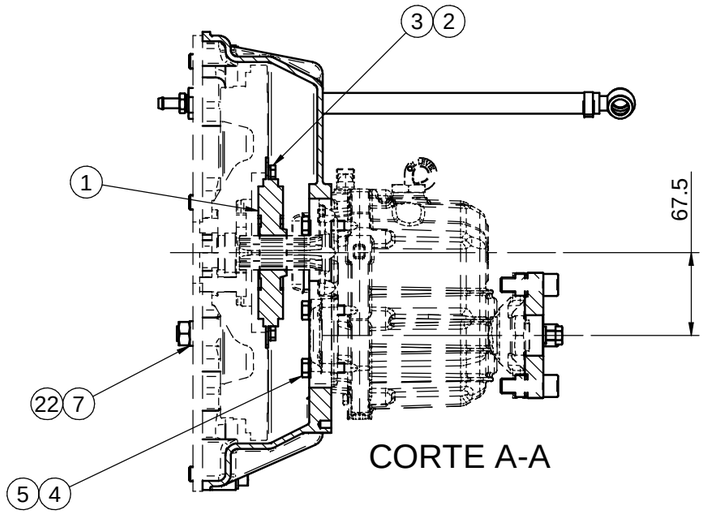

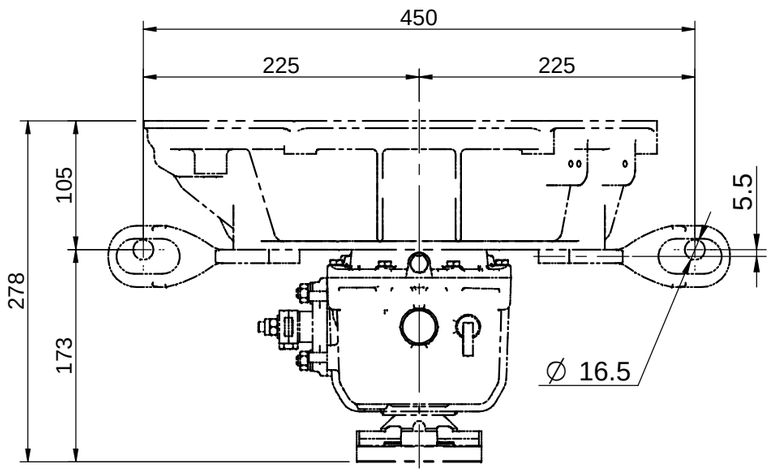

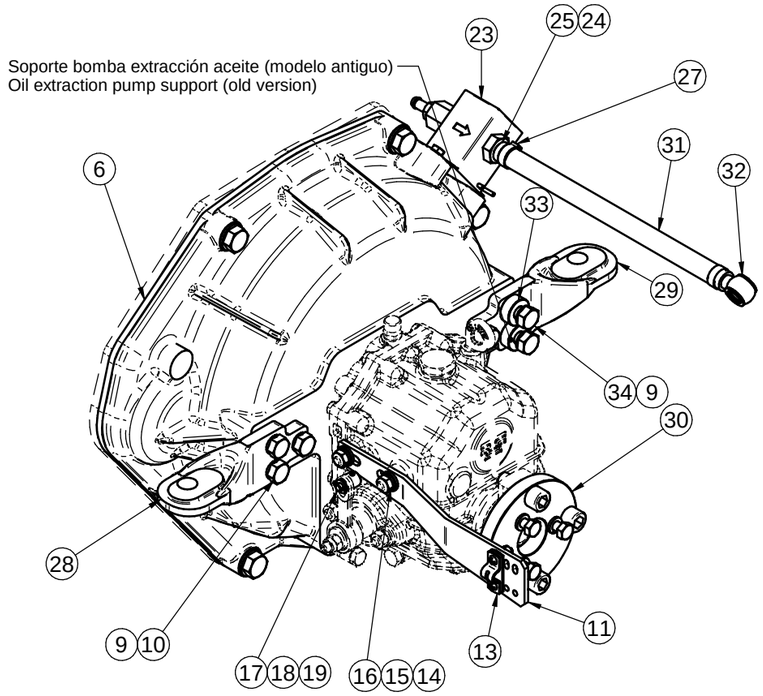

Nº	Referencia	Descripción	Material	Cant.
1	13110040	ACOPLAMIENTO ELASTICO		1
2	53033006	ARANDELA GROWER DIN 127 Ø6	Acero	8
3	52102155	TORNILLO M6x12 DIN 933	ACERO 8.8	8
4	53101259	TORNILLO DIN 931 M8x30 12.9	Acero 12.9	6
5	53038008	ARANDELA ESTRIADA Ø8 DIN-6798A	Acero	6
6	17210009	CARCASA ACOPLAMIENTO INV.	Aluminio	1
7	53033012	ARANDELA GROWER Ø12 DIN 127	S-275 JR	2
8	52202361	TORNILLO M12x1.25, L= 40 DIN 933	ACERO 8.8	5
9	53033010	ARANDELA GROWER Ø10 DIN-127	Acero	6
10	52102309	TORNILLO DIN 933	Acero	4
11	24810901	SOPORTE MORSE INVERSOR	S-275 JR	1
12	51030005	ARANDELA PLANA DIN125-05	Acero	2
13	24810913	BRIDA FIJACION CABLE		1
14	51030008	ARANDELA ACERO DIN125-8 CINCADA	Acero	2
15	53033008	ARANDELA GROWER DIN 127-8 CINCADA	Acero	2
16	52120008	TUERCA M8 DIN-934	Acero	2
17	14719115	TERMINAL CABLE	Latón	1
18	51030006	ARANDELA PLANA Ø6 DIN125	Acero	3
19	51051107	PASADOR ALETAS Ø1.6x16 DIN 94	Acero	1
20	53038012	ARANDELA ESTRIADA Ø12 DIN-6798A		7
21	52101363	TORNILLO M12x50 DIN 931	ACERO 8.8	2
22	52120012	TUERCA DIN 934 M12 8.8	Acero	2
23	13814070	BOMBA ALIMENTACIÓN ELECTRICA 12V		1
24	13814072	ENTRONQUE 1/8" NPTF	F-111	2
25	57000361	ARANDELA	Aluminio	2
26	52102154	TORNILLO M6x10 DIN 933	Acero 8.8	2
27	51086016	ABRAZADERA UNA OREJA CON ARO	AISI A-304	1
28	13210026.2	SOPORTE POSTERIOR EXCEN. +5.5D/-5.5I	Fundición	1
29	13210026.1	SOPORTE POSTERIOR EXCEN. +5.5I/-5.5D	Fundición	1
30	40019110	CONJUNTO ADAP. BRIDA 62 A 102		1
31	13814012	TUBO BOMBA A FILTRO		1
32	57000369	ARANDELA DE ALUMINIO Ø20/14.2x1.5	Aluminio	2
33	19017018	GRUESO 10,5x24x10	F-111	2
34	52101311	TORNILLO M10x40 DIN 931 8.8	Acero 8.8	2

Kit sustitución RONIM IV / RONIM V por TMC-40P

- Si el volante de inercia no está mecanizado, se tendrá que mecanizar a parte según el plano de la siguiente página.

- La bomba de alimentación de combustible necesita ser conectada a una fuente de 12V durante el funcionamiento del motor.

RONIM IV / RONIM V to TMC-40P replacement kit

- If the flywheel is not mechanized yet, It is needed mechanize it separately according to drawing of the next page.

- The fuel feeding pump must be connected to a 12V electric source while the enigne is running.

Los soportes nº28 y nº29 pueden montar en una posición u otra, según convenga.

Brackets # 28 and # 29 mount in one position or another, as appropriate.

* Inversor TMC-40P no incluido (se suministra a parte)
TMC-40P gearbox not included (supplied separately)

Medidas Nominales (mm)			
0 a 6	±0.05	±0.1	±0.2
6 a 30	±0.1	±0.2	±0.5
30 a 100	±0.15	±0.3	±0.8
100 a 300	±0.2	±0.5	±1.2
Grado de Precisión DIN-7168	Fino	Medio	Basto

KIT SUST. RONIM A TMC-40P MINI-23/32

RONIM TO TMC-40P REPL. KIT FOR MINI-23/32

MATERIAL	ACABADO	TRATAMIENTO	PRESENTACIÓN	ESCALA
				./.

DIBUJADO	VERIFICADO	GRADO PRECISIÓN	FECHA CREACIÓN	ÚLTIMA REVISIÓN
OSCARV	P.IGLESIAS	MEDIO	29/04/2021	

Solé Diesel **SOLÉ, S.A.** 13210242

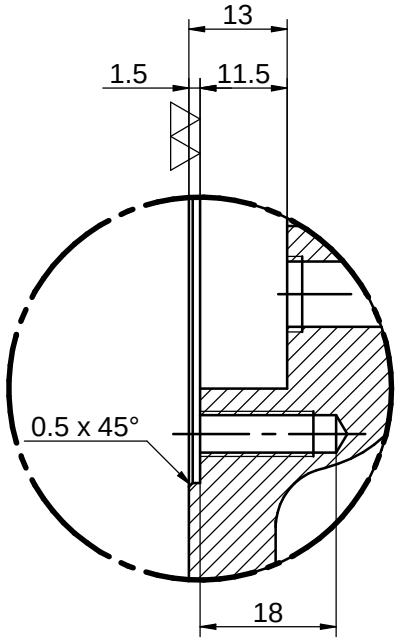

DETALLE B

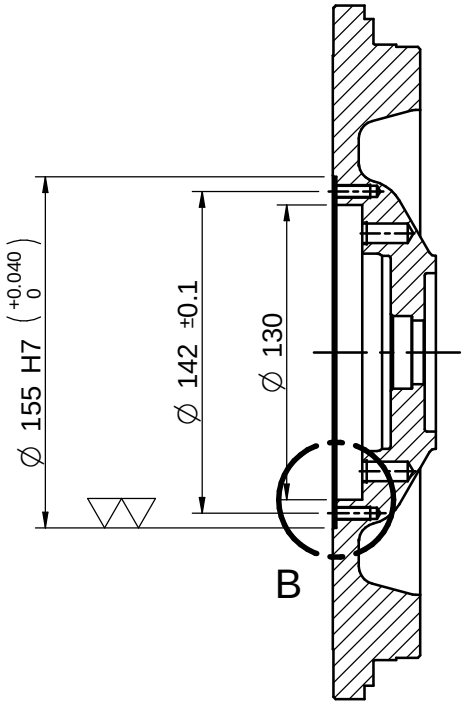

CORTE A-A

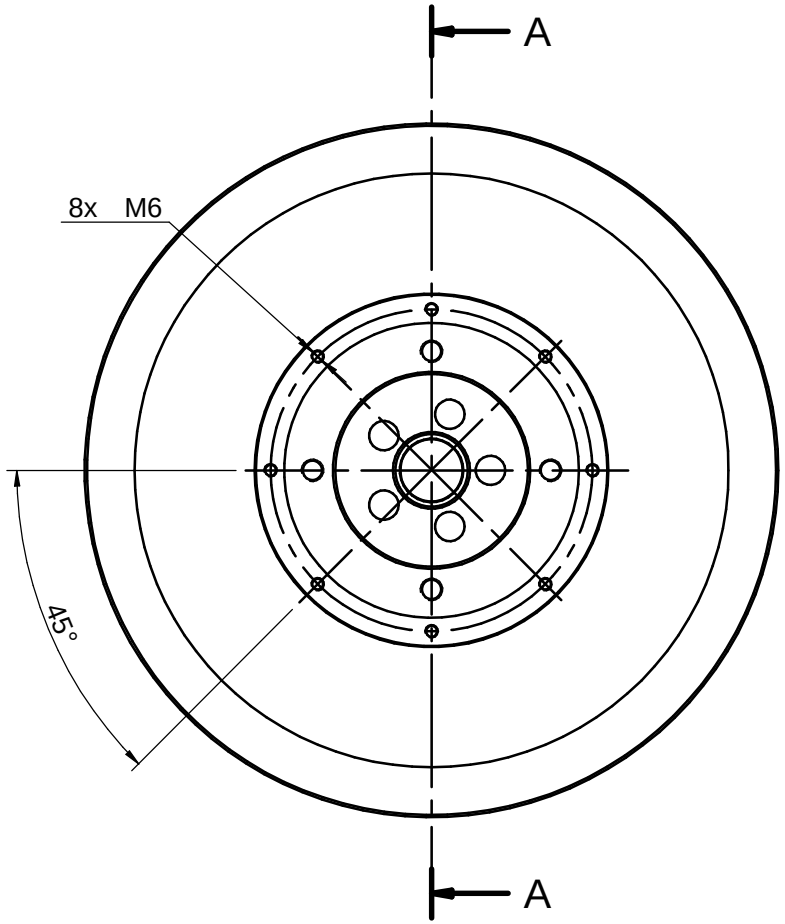

Medidas Nominales (mm)								
100 a 300	±0.2	±0.5	±1.2	VOLANTE MECANIZADO ENCAJE D.155				
30 a 100	±0.15	±0.3	±0.8	MEC. FLYWHEEL D.155 CENTERING GROOVE				
6 a 30	±0.1	±0.2	±0.5	MATERIAL	ACABADO	TRATAMIENTO	PRESENTACIÓN	ESCALA ./.
0 a 6	±0.05	±0.1	±0.2	DIBUJADO OSCARV	VERIFICADO P.IGLESIAS	GRADO PRECISIÓN MEDIO	FECHA CREACIÓN 06/05/2021	ÚLTIMA REVISIÓN ---
Grado de Precisión DIN-7168	Fino	Medio	Basto	Solé Diesel	SOLÉ, S.A.			