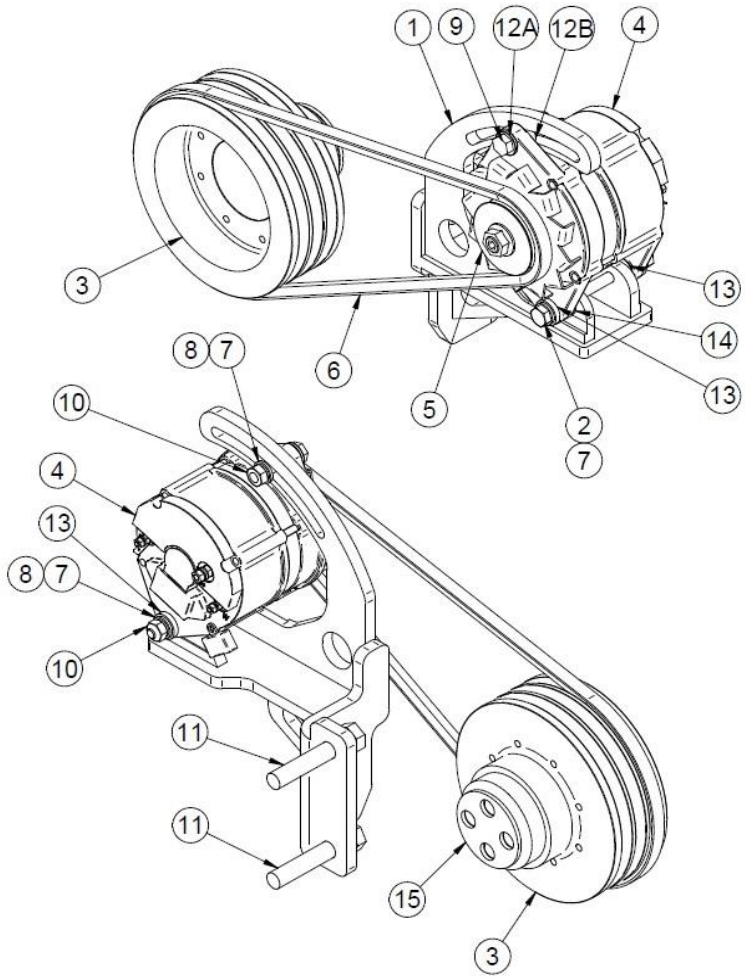19517097B			Kit 2nd Alt.28V/55A 4A Earth Isol.		
FIG.	REF.	QTY	DESCR.	FROM	UPTO
1	19517097.1B	1	Bracket, Alternator		
2	52101326	1	Bolt DIN 931 M10-130 8.8		
3	19610102	1	Kit V-Front Pulley 3A		
4	19517097.2B	1	Alternator 28V/55A		
5	17417022	1	Pulley		
6	17521028	1	Belt Type AX 45 1175		
7	51030010	3	Washer DIN 125-10		
8	53033010	2	Washer GROWER DIN 127-10		
9	52101313	1	Bolt DIN 931 M10-50 8.8		
10	52120010	2	Nut DIN 934 M10 8.8		
11	52101471	2	Bolt DIN 931 M16-90 8.8 CINCADO		
12A	19517013	1	BAKELITE BUSHING		
12B	19517014	1	BAKELITE BUSHING		
13	17217022	3	Bracket Bakelite Bushing		
14	17217023	1	Celotex Screw Insulator		
15	19517015	1	Ring Spacer 75x4mm