19410255			Kit GearBox ZF 68 IV (MAX 3000H/YEAR)		
FIG.	REF.	QTY	DESCR.	FROM	UPTO
1	16510170	1	Flexible coupling type C SAE 11"1/2		
2	53038010	8	Washer DIN 6798-A 10		
3	52103308	8	Bolt DIN 912 M10-25 8.8		
4	14910012	1	SAE 3 housing gearbox		
5	53033010	14	Washer GROWER DIN 127-10		
6	52102309	12	Bolt DIN 933 M10-30 8.8		
8	53038012	6	Washer DIN 6798-A 12		
8	52302310	4	Bolt DIN 933 W7/16-35 8.8		
9	14719115	1	Coupling,cable		
10	51030006	7	Washer DIN 125-6		
11	51051107	1	Pin DIN-94 1,6-16		
12	52102157	2	Bolt DIN 933 M6-20 8.8		
13	55307104	2	Bolt DIN 86 W3/16-10		
14	14719013	1	Clamp,cable		
15	12119021	1	SUPORT Clamp		
16	16519020	1	Bracket, Gear box control		
17	53033006	2	Washer GROWER DIN 127-6		
18	52120006	2	Nut DIN 934 M6 8.8		
19	52320716	1	Nut DIN 934 W 7/16 8.8		
20	17510004	1	Stud 7/16Wx44		
22	19412002	2	Water Cooler Cover		
23	54082050	2	Clamp DIN 3017 50-70/12 W4		
24	57000375	4	Washer 17-22-1,5		
24	59031017	4	Washer		
26	14712015	2	Bolt,Coupling pipe oil		
28	19411034	1	Pipe, rubber		
29	54082032	4	Clamp DIN 3017 32-50/12 W4		
30	14712051	1	Cooler,oil		
30	1A012051	1	Cooler,oil		
31	51083060	1	GP Clamp 59-63 W2		
32	19411049	2	Coupling		
32	16512010	1	Bracket,oil cooler		
33	17017102	2	Spacer 10,5X22X46		
NS	18512024	2	Pipe [NS]		

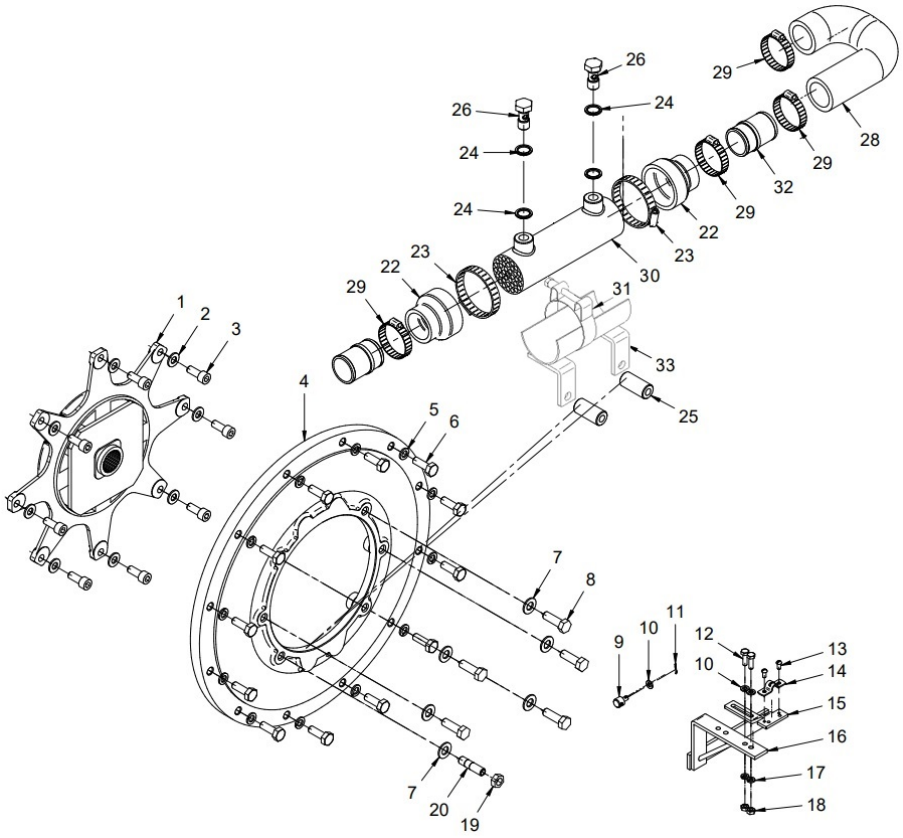

[NS] Not shown