17613115C			Flexible Dry Exhaust Elbow Tube Kit (S)		
FIG.	REF.	QTY	DESCR.	FROM	UPTO
1	17613115	1	Dry Exhaust With Flexible Pipe		
2	13211035	1	Exhaust Manifold Outlet Bend		
NS	53033008	4	Washer GROWER DIN 127-8 [NS]		

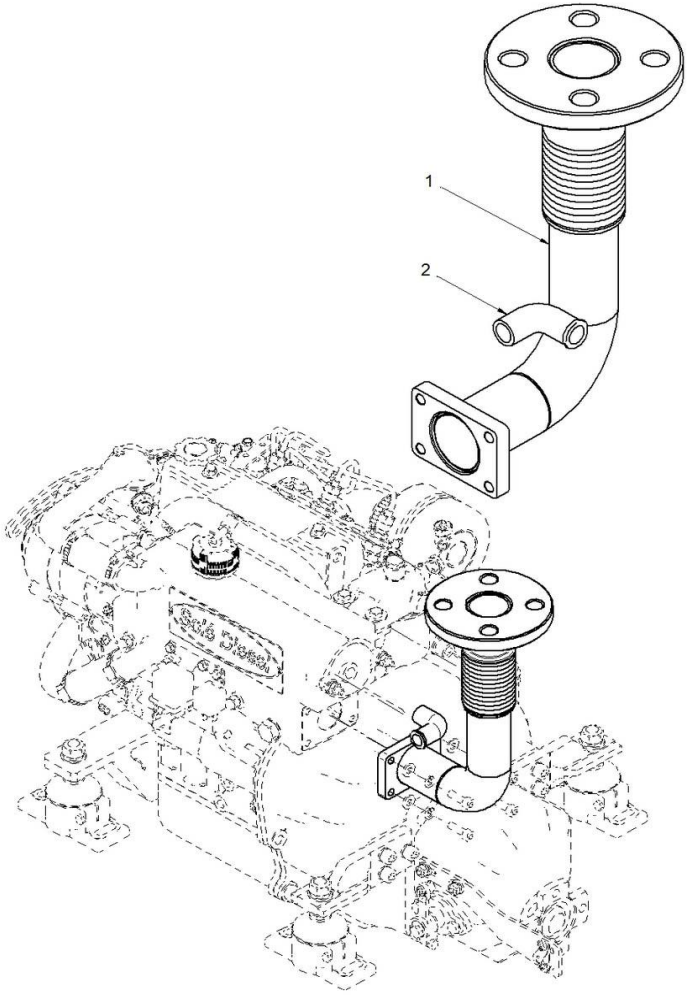

[NS] Not shown