| 17210100.1 | | | Kit Z-Drive Volvo 270/280/290 Z=10 | | |
|---|---|---|---|---|---|
| FIG. | REF. | QTY | DESCR. | FROM | UPTO |
| 1 | 17222027.1 | 1 | Flywheel | | |
| 2 | 17210071 | 1 | Flexible Coupling Type B SAE 6"1/2 | | |
| 3 | 53038008 | 6 | Washer DIN 6798-A 8 | | |
| 4 | 52102257 | 6 | Bolt DIN 933 M8-20 8.8 | | |
| 5 | 13410018 | 1 | SAE 7,adaptor flange | | |
| 6 | 53033012 | 3 | Washer Grower DIN 127-12 | | |
| 7 | 52202360 | 1 | Bolt DIN 933 M12-1,25-35 8.8 | | |
| 8 | 52202361 | 1 | Bolt DIN 933 M12-1,25-40 8.8 | | |
| 9 | 17210100.1R | 1 | Kit Z-Drive Volvo 270/280/290 Z=10 | | |
| 10 | 53038010 | 6 | Washer DIN 6798-A 10 | | |
| 11 | 52102309 | 6 | Bolt DIN 933 M10-30 8.8 | | |
| 12 | 52202359 | 3 | Bolt DIN 933 M12-1,25-30 8.8 | | |
| 13 | 53038012 | 4 | Washer DIN 6798-A 12 | | |
| 14 | 52102358 | 2 | Bolt DIN 933 M12-25 8.8 | | |
| 15 | 13814072 | 2 | Straight Hose Connector 1/8" NPTF | | |
| 16 | 57000361 | 2 | Washer 10-14-1,5 | | |
| 17 | 13814070 | 1 | Electric Fuel Feed Pump 12V | | |
| 18 | 51030006 | 2 | Washer DIN 125-6 | | |
| 19 | 53033006 | 2 | Washer GROWER DIN 127-6 | | |
| 20 | 52102155 | 2 | Bolt DIN 933 M6-12 8.8 | | |
| 21 | 13814012 | 1 | Pipe | | |
| NS | 58088283 | 2 | Pastic Cable Zip Tie [NS] | | |
| NS | 60900126 | 1 | TERMINAL [NS] | | |

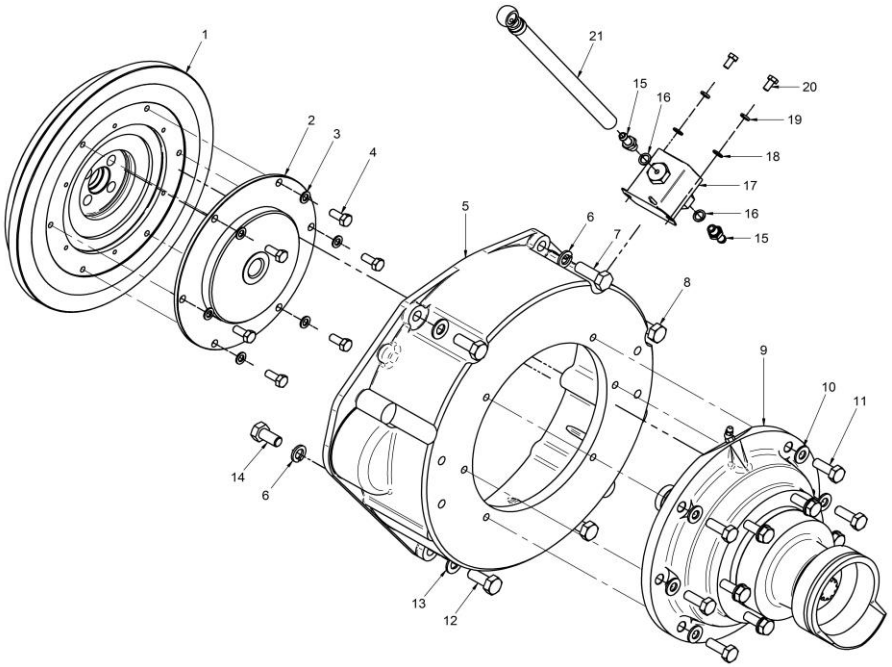


[NS] Not shown